Control valve in straightway form with flanges and butt weld ends (shoed ends)
DN 15 - 125

ARI-STEVI® 472
Electric actuator ARI-PREMIO

- Enclosure IP 65
- 2 torque switches
- Handwheel
- Additional devices available, e.g. potentiometer

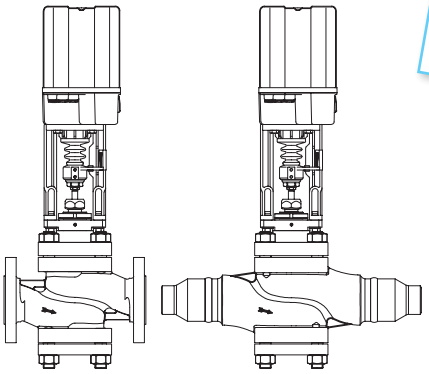

Page 2

Fig. 472....1

ARI-STEVI® 472
Electric actuator AUMA SAR

- Electric multiturn actuator, capable of high closing pressures
- Enclosure IP 67
- 2 torque switches
- 2 travel switches
- Handwheel
- Overheating protection for motor as standard
- Additional devices available, e.g. potentiometer
- Explosion proof version available

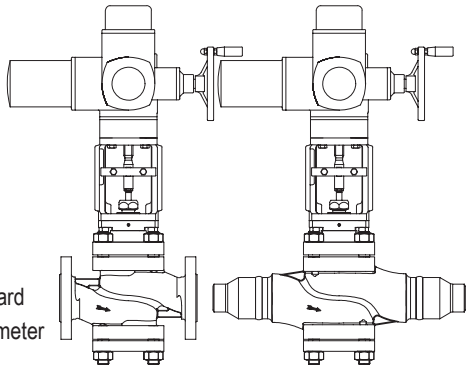

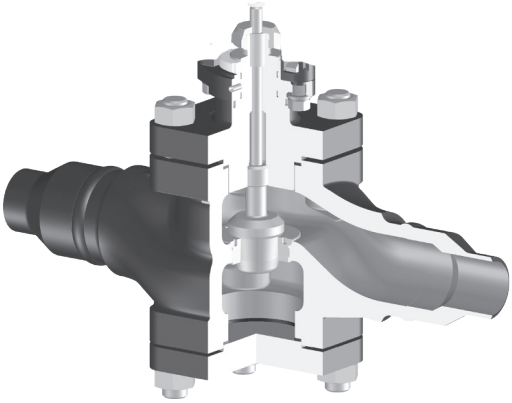

Page 8

Fig. 472...4

ARI-STEVI® 472
Pneumatic actuator ARI-DP

- Reversible pneumatic actuator
- Actuator with rolling diaphragm
- Air supply pressure max. 6 bar
- Stem protection by bellow
- Maintenance-free O-ring sealing
- Assembly of additional devices acc. to DIN IEC 60534-6

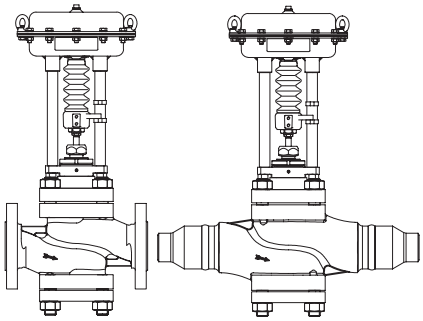

Page 14

Features:

- Compact design
- Precision guided stem
- Roller burnished stem
- Tapered seat ring
- Replaceable seat and plug
- to close 5 Reducible kvs-values
- Rangeability 25 : 1
- Post guided plug
- Travel indicator
- larger nominal diameters on request

Control valve in straightway form with electric actuator ARI-PREMIO

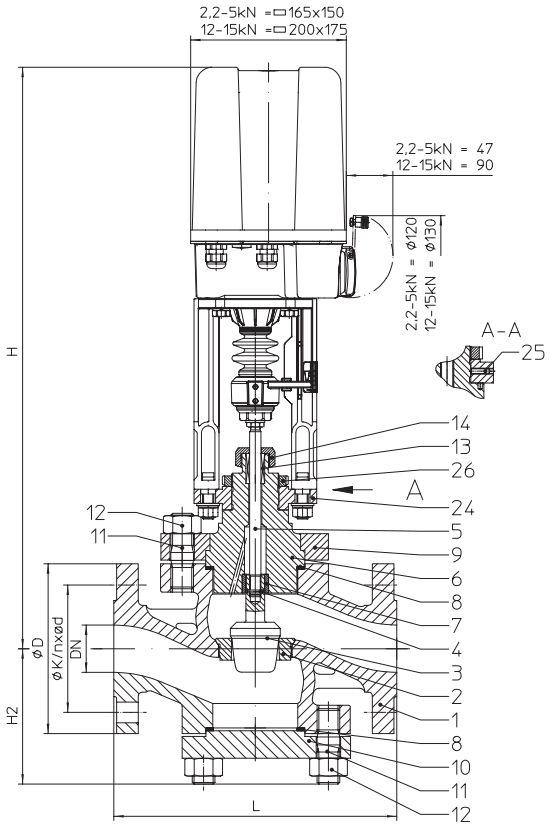

Fig. 472....1

Figure	Nominal pressure	Material	Nominal diameter
36.472	PN63	1.0619+N	DN15-125
37.472	PN100	1.0619+N	DN15-125
38.472	PN160	1.0619+N	DN15-125
86.472	PN63	1.7379	DN15-125
87.472	PN100	1.7379	DN15-125
88.472	PN160	1.7379	DN15-125

Other materials and versions on request.

Stem sealing
- Pure graphite-packing -10°C to 550°C

Plug design
standard: • Parabolic plug, metal seat
optional:
- Perforated plug, metal seat (from DN25)
- Pressure balanced plug, metal seat.
  Material of piston seal:
  O-ring and glyd ring (max. 200°C)
  multi-plate rings (max. 450°C)
  piston rings (max. 550°C)

Guiding
- Parabolic plug: post guiding
- Perforated plug: post- and port guiding

Flow characteristic
- Equal percentage or linear
  (Perforated plug only linear)

Rangeability
- 25 : 1

Shut off class (seat / plug leakage classes) acc. to IEC 60534-4
standard: • Metal / metal - Leakage class IV
optional:
- Metal / metal - Pressure balanced plug with O-ring and glyd ring, Leakage class III
- Metal / metal - Pressure balanced plug with multi-plate rings or piston rings, Leakage class II

Closing pressures refer to page 4-7.

Technical data for actuator refer to data sheet.

Selection of possible applications

Industrial installations, processing technology, plant manufacturing, etc.
(other applications on request)

Selection of possible flow media

Water and steam

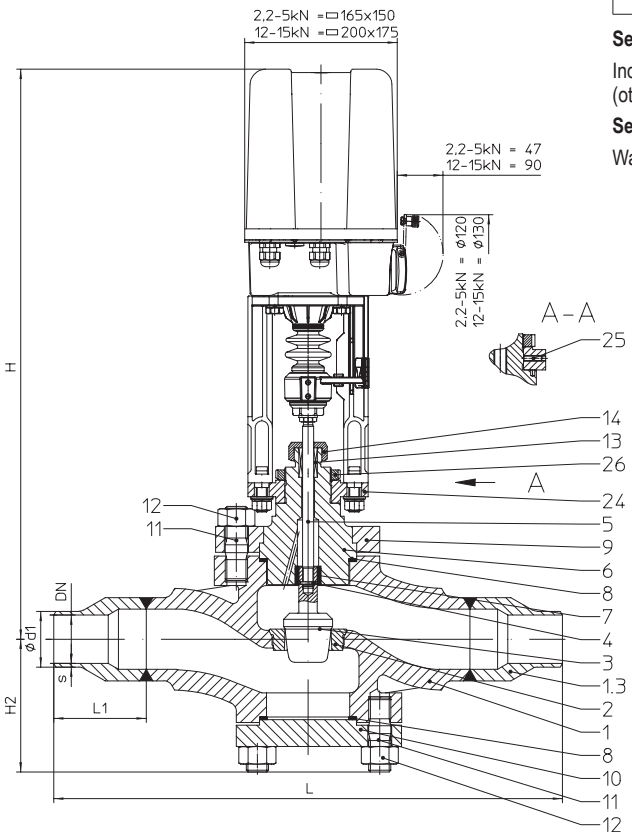

Fig. 472....4

Dimensions and weights

DN				15	25	40	50	65	80	100	125
L			(mm)	210	230	260	300	340	380	430	500
H2			(mm)	111	111	144	144	144	195	195	220
Fig. 472....1	H		(mm)	581	581	622	622	622	679	679	902
	H (extended bonnet) [1]		(mm)	681	681	722	722	722	829	829	1052
	ARI-PREMIO 2,2 kN	PN63-160	(kg)	23,4	30,4	45,4	--	--	--	--	--
	ARI-PREMIO 5 kN	PN63-160	(kg)	24,5	31,5	46,5	56,5	61,5	86,5	121,5	215,5
Fig. 472....1	H		(mm)	731	731	772	772	772	807	807	1047
	H (extended bonnet) [1]		(mm)	831	831	872	872	872	957	957	1197
	ARI-PREMIO 12 kN ARI-PREMIO 15 kN	PN63-160	(kg)	28,5	35,5	50,5	60,5	65,5	90,5	125,5	219,5

Standard-flange dimensions refer to page 23. Face-to-face dimension FTF series 2 acc. to DIN EN 558

DN				15	25	40	50	65	80	100	125
L			(mm)	450		560 (450)			800 (560/450)	800 (560)	900 (800)
L1			(mm)	75		100 (75)			125 (100/75)	125 (100)	130 (125)
H2			(mm)	111		144 (111)			195 (144/111)	195 (144)	220 (195)
Fig. 472....4	H		(mm)	581		622 (581)			679 (622/581)	679 (622)	902 (679)
	H (extended bonnet) [1]		(mm)	681		722 (681)			829 (722/681)	829 (722)	1052 (829)
	ARI-PREMIO 2,2 kN	PN63-160	(kg)	25,4		55,4 (25,4)			--	--	--
	ARI-PREMIO 5 kN	PN63-160	(kg)	26,5		56,5 (26,5)			86,5 (56,5/26,5)	86,5 (56,5)	173,5 (86,5)
Fig. 472....4	H		(mm)	731		772 (731)			807 (772/731)	807 (772)	1047 (807)
	H (extended bonnet) [1]		(mm)	831		872 (831)			957 (872/831)	957 (872)	1197 (957)
	ARI-PREMIO 12 kN ARI-PREMIO 15 kN	PN63-160	(kg)	30,5		60,5 (30,5)			90,5 (60,5/30,5)	90,5 (60,5)	177,5 (90,5)

Shoed butt weld ends refer to page 23.

[1] at media temperatures >300°C (refer to page 24) (Values in brackets for reduced travels.)

Parts

Pos.	Description	Fig. 36./37./38.472....1	Fig. 36./37./38.472....4	Fig. 86./87./88.472....1	Fig. 86./87./88.472....4
1	Body	GP240GH+N, 1.0619+N		G17CrMo9-10, 1.7379	
1.3	Shoed butt weld ends	--	P250 GH, 1.0460 (optional: 16Mo3, 1.5415)	--	16Mo3, 1.5415 (optional: 11CrMo9-10, 1.7383)
2	Seat ring *	X6CrNiMoTi17-12-2, 1.4571			
3	Plug *	X6CrNiMoTi17-12-2, 1.4571			
4	Straight pin *	X6CrNiMoTi17-12-2, 1.4571			
5	Stem *	X39CrMo17-1+QT, 1.4122+QT			
6	Stuffing box housing	X6CrNiMoTi17-12-2, 1.4571			
7	Guide bushing	X17CrNi16-2, 1.4057			
8	Gasket *	Pure graphite (CrNi laminated with graphite)			
9	Clamping flange	P250 GH, 1.0460 or P265 GH, 1.0425		16Mo3, 1.5415 (optional: 11CrMo9-10, 1.7383)	
10	Flange	P250 GH, 1.0460 or P265 GH, 1.0425		16Mo3, 1.5415 (optional: 11CrMo9-10, 1.7383)	
11	Studs	25CrMo4, 1.7218		21CrMoV 5-7, 1.7709	
12	Hexagon nuts	C35E, 1.1181		25CrMo4, 1.7218	
13	Packing ring *	Pure graphite			
14	Sleeve nut	X5CrNi18-10, 1.4301			
24	Mounting bonnet	S235JR, 1.0037			
25	Grub screw	45H-A2K			
26	Slotted nut	5.8-A2G			

For applications above 400°C the materials may differ!

* Spare parts

Information / restriction of technical rules need to be observed!

The engineer, designing a system or a plant, is responsible for the selection of the correct valve.

max. permissible closing pressures on flow-to-open P2 = 0.
Observe restrictions by Pressure-temperature-ratings, refer to page 23.

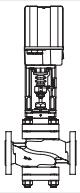

Fig. 472 with flanges

DN		15			25			40				50					65				
Kvs-value	Seat-Ø (mm)	6	12	20	12	20	26	20	26	32	40	20	26	32	40	50	26	32	40	50	65
	Parabolic plug	0,4	1,6 / 1,0 / 0,63	2,5 / 4	1,6 / 1,0 / 0,63	6,3 / 4,0 / 2,5	10	6,3 / 4,0 / 2,5	10	16	25	6,3	10	16	25	40	10	16	25	40	63
	Perforated plug	--	--	2,5	--	2,5 / 4	6,3	4	6,3	10	16	--	6,3	10	16	25	--	10	16	25	40
	Travel (mm)	20	20	20	20	20	20	30	30	30	30	30	30	30	30	30	30	30	30	30	30
Max. differential pressure drop (bar)	Parabolic plug	30	30	30	30	30	30	30	30	30	30	30	30	30	30	30	30	30	30	30	15
	Perforated plug	40	40	40	40	40	40	40	40	40	40	40	40	40	40	40	40	40	40	40	40
Actuator [1] **ARI-PREMIO 2,2 kN**	Closing pressure (bar)	112,9	106,6	35,4	106,6	35,4	19,6	35,4	19,6	12,1	7										
	Operating time [2] (s) (Op. speed 0,38 mm/s)	53			53			79													
Actuator [1] **ARI-PREMIO 5 kN**	Closing pressure (bar)	160	160	106,7	160	106,7	61,8	106,7	61,8	39,9	24,8	106,7	61,8	39,9	24,8	15,3	61,8	39,9	24,8	15,3	8,5
	Operating time [2] (s) (Op. speed 0,38 mm/s)	53			53			79				79							79		
Actuator [1] **ARI-PREMIO 12 kN**	Closing pressure (bar)	160	160	160	160	160	160	160	160	109,6	69,4	160	160	109,6	69,4	43,8	160	109,6	69,4	43,8	25,4
	Operating time [2] (s) (Op. speed 0,38 mm/s)	53			53			79				79					79				
Actuator [1] **ARI-PREMIO 15 kN**	Closing pressure (bar)	160	160	160	160	160	160	160	160	139,4	88,5	160	160	139,4	88,5	56	160	139,4	88,5	56	32,6
	Operating time [2] (s) (Op. speed 0,38 mm/s)	53			53			79				79					79				

DN		80					100					125				
Kvs-value	Seat-Ø (mm)	32	40	50	65	80	40	50	65	80	100	50	65	80	100	125
	Parabolic plug	16	25	40	63	100	25	40	63	100	160	40	63	100	160	200
	Perforated plug	--	16	25	40	63	--	25	40	63	100	--	40	63	100	160
	Travel (mm)	40	40	40	40	40	40	40	40	40	40	40	40	40	40	40
Max. differential pressure drop (bar)	Parabolic plug	30	30	30	30	30	30	30	30	30	30	30	30	30	30	30
	Perforated plug	40	40	40	40	40	40	40	40	40	40	40	40	40	40	40
Actuator [1] **ARI-PREMIO 5 kN**	Closing pressure (bar)	38,2	23,7	14,6	8,1	5	23,7	14,6	8,1	5	2,9					
	Operating time [2] (s) (Op. speed 0,38 mm/s)	105					105									
Actuator [1] **ARI-PREMIO 12 kN**	Closing pressure (bar)	107,8	68,3	43,1	25	16,1	68,3	43,1	25	16,1	10	43,1	25	16,1	10	6,2
	Operating time [2] (s) (Op. speed 0,38 mm/s)	105					105					105				
Actuator [1] **ARI-PREMIO 15 kN**	Closing pressure (bar)	137,7	87,4	55,3	32,2	20,9	87,4	55,3	32,2	20,9	13,1	55,3	32,2	20,9	13,1	8,1
	Operating time [2] (s) (Op. speed 0,38 mm/s)	105					105					105				

[1] Motor voltage: 230V 50Hz
Other voltages: 24V 50/60Hz; 115V 50/60Hz; 230V 60Hz
Technical data for actuator refer to data sheet ARI-PREMIO.

[2] Indicated operating times with 50Hz.

max. permissible closing pressures on flow-to-open P2 = 0.
Observe restrictions by Pressure-temperature-ratings, refer to page 23.

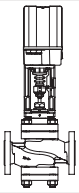

Fig. 472 with flanges and Pressure balanced plug

DN		40				50					65				
Kvs-value	Seat-Ø (mm)	20	26	32	40	20	26	32	40	50	26	32	40	50	65
	Parabolic plug	6,3 / 4,0 / 2,5	10	16	25	6,3	10	16	25	40	10	16	25	40	63
	Perforated plug	4	6,3	10	16	--	6,3	10	16	25	--	10	16	25	40
	Travel (mm)	30	30	30	30	30	30	30	30	30	30	30	30	30	30
Max. differential pressure drop (bar)	Parabolic plug	30	30	30	30	30	30	30	30	30	30	30	30	30	15
	Perforated plug	40	40	40	40	40	40	40	40	40	40	40	40	40	40
Actuator [1] **ARI-PREMIO 2,2 kN**	Closing pressure (bar)	80	70	60	50	80	70	60	50	40					
	Operating time [2] (s) (Op. speed 0,38 mm/s)	79				79									
Actuator [1] **ARI-PREMIO 5 kN**	Closing pressure (bar)	160	160	160	160	160	160	160	160	160	160	160	160	160	160
	Operating time [2] (s) (Op. speed 0,38 mm/s)	79				79					79				
Actuator [1] **ARI-PREMIO 12 kN**	Closing pressure (bar)	160	160	160	160	160	160	160	160	160	160	160	160	160	160
	Operating time [2] (s) (Op. speed 0,38 mm/s)	79				79					79				
Actuator [1] **ARI-PREMIO 15 kN**	Closing pressure (bar)														
	Operating time [2] (s) (Op. speed 0,38 mm/s)														

DN		80					100					125				
Kvs-value	Seat-Ø (mm)	32	40	50	65	80	40	50	65	80	100	50	65	80	100	125
	Parabolic plug	16	25	40	63	100	25	40	63	100	160	40	63	100	160	200
	Perforated plug	--	16	25	40	63	--	25	40	63	100	--	40	63	100	160
	Travel (mm)	40	40	40	40	40	40	40	40	40	40	40	40	40	40	40
Max. differential pressure drop (bar)	Parabolic plug	30	30	30	30	30	30	30	30	30	30	30	30	30	30	30
	Perforated plug	40	40	40	40	40	40	40	40	40	40	40	40	40	40	40
Actuator [1] **ARI-PREMIO 5 kN**	Closing pressure (bar)	135	130	120	105	95	130	120	105	95	75	120	105	95	75	60
	Operating time [2] (s) (Op. speed 0,38 mm/s)	105					105					105				
Actuator [1] **ARI-PREMIO 12 kN**	Closing pressure (bar)	160	160	160	160	160	160	160	160	160	160	160	160	160	160	160
	Operating time [2] (s) (Op. speed 0,38 mm/s)	105					105					105				
Actuator [1] **ARI-PREMIO 15 kN**	Closing pressure (bar)	160	160	160	160	160	160	160	160	160	160	160	160	160	160	160
	Operating time [2] (s) (Op. speed 0,38 mm/s)	105					105					105				

[1] Motor voltage: 230V 50Hz
Other voltages: 24V 50/60Hz; 115V 50/60Hz; 230V 60Hz
Technical data for actuator refer to data sheet ARI-PREMIO.

[2] Indicated operating times with 50Hz.

max. permissible closing pressures on flow-to-open P2 = 0.
Observe restrictions by Pressure-temperature-ratings, refer to page 23.

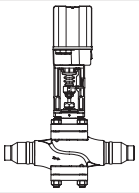

Fig. 472 with butt weld ends

DN		15			25			40				50					65				
Kvs-value	Seat-Ø (mm)	6	12	20	12	20	26	20	26	32	40	20	26	32	40	50	26	32	40	50	65
	Parabolic plug	0,4	1,6 / 1,0 / 0,63	2,5 / 4	1,6 / 1,0 / 0,63	6,3 / 4,0 / 2,5	10	6,3 / 4,0 / 2,5	10	16	25	6,3	10	16	25	40	10	16	25	40	63
	Perforated plug	--	--	2,5	--	2,5 / 4	6,3	4	6,3	10	16	--	6,3	10	16	25	--	10	16	25	40
	Travel (mm)	20	20	20	20	20	20	20	20	20	30	20	20	20	30	30	20	20	30	30	30
Max. differential pressure drop (bar)	Parabolic plug	30	30	30	30	30	30	30	30	30	30	30	30	30	30	30	30	30	30	30	15
	Perforated plug	--	--	40	--	40	40	40	40	40	40	--	40	40	40	40	--	40	40	40	40
Actuator [1] **ARI-PREMIO 2,2 kN**	Closing pressure (bar)	112,9	106,6	35,4	106,6	35,4	19,6	35,4	19,6	12,1	7										
	Operating time [2] (s) (Op. speed 0,38 mm/s)	53			53			53			79										
Actuator [1] **ARI-PREMIO 5 kN**	Closing pressure (bar)	160	160	106,7	160	106,7	61,8	106,7	61,8	39,9	24,8	106,7	61,8	39,9	24,8	15,3	61,8	39,9	24,8	15,3	8,5
	Operating time [2] (s) (Op. speed 0,38 mm/s)	53			53			53			79	53			79		53		79		
Actuator [1] **ARI-PREMIO 12 kN**	Closing pressure (bar)	160	160	160	160	160	160	160	160	109,6	69,4	160	160	109,6	69,4	43,8	160	109,6	69,4	43,8	25,4
	Operating time [2] (s) (Op. speed 0,38 mm/s)	53			53			53			79	53			79		53		79		
Actuator [1] **ARI-PREMIO 15 kN**	Closing pressure (bar)	160	160	160	160	160	160	160	160	139,4	88,5	160	160	139,4	88,5	56	160	139,4	88,5	56	32,6
	Operating time [2] (s) (Op. speed 0,38 mm/s)	53			53			53			79	53			79		53		79		

DN		80					100					125				
Kvs-value	Seat-Ø (mm)	32	40	50	65	80	40	50	65	80	100	50	65	80	100	125
	Parabolic plug	16	25	40	63	100	25	40	63	100	160	40	63	100	160	200
	Perforated plug	--	16	25	40	63	--	25	40	63	100	--	40	63	100	160
	Travel (mm)	20	30	30	30	40	30	30	30	40	40	30	30	40	40	40
Max. differential pressure drop (bar)	Parabolic plug	30	30	30	15	30	30	30	15	30	30	30	30	30	30	30
	Perforated plug	--	40	40	40	40	--	40	40	40	40	40	40	40	40	40
Actuator [1] **ARI-PREMIO 5 kN**	Closing pressure (bar)	39,9	24,8	15,3	8,5	5	24,8	15,3	8,5	5	2,9					
	Operating time [2] (s) (Op. speed 0,38 mm/s)	53	79			105	79			105						
Actuator [1] **ARI-PREMIO 12 kN**	Closing pressure (bar)	109,6	69,4	43,8	25,4	16,1	69,4	43,8	25,4	16,1	10	43,8	25,4	16,1	10	6,2
	Operating time [2] (s) (Op. speed 0,38 mm/s)	53	79			105	79			105		105				
Actuator [1] **ARI-PREMIO 15 kN**	Closing pressure (bar)	139,4	88,5	56	32,6	20,9	88,5	56	32,6	20,9	13,1	56	32,6	20,9	13,1	8,1
	Operating time [2] (s) (Op. speed 0,38 mm/s)	53	79			105	79			105		105				

[1] Motor voltage: 230V 50Hz
Other voltages: 24V 50/60Hz; 115V 50/60Hz; 230V 60Hz
Technical data for actuator refer to data sheet ARI-PREMIO.

[2] Indicated operating times with 50Hz.

max. permissible closing pressures on flow-to-open P2 = 0.
Observe restrictions by Pressure-temperature-ratings, refer to page 23.

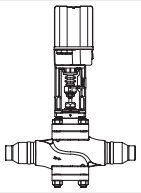

Fig. 472 with butt weld ends and Pressure balanced plug

DN		40				50					65				
Kvs-value	Seat-Ø (mm)	20	26	32	40	20	26	32	40	50	26	32	40	50	65
	Parabolic plug	6,3 / 4,0 / 2,5	10	16	25	6,3	10	16	25	40	10	16	25	40	63
	Perforated plug	4	6,3	10	16	--	6,3	10	16	25	--	10	16	25	40
	Travel (mm)	20	20	20	30	20	20	20	30	30	20	20	30	30	30
Max. differential pressure drop (bar)	Parabolic plug	30	30	30	30	30	30	30	30	30	30	30	30	30	15
	Perforated plug	40	40	40	40	--	40	40	40	40	--	40	40	40	40
Actuator [1] **ARI-PREMIO 2,2 kN**	Closing pressure (bar)	80	70	60	50	80	70	60	50	40					
	Operating time [2] (s) (Op. speed 0,38 mm/s)	53			79	53			79						
Actuator [1] **ARI-PREMIO 5 kN**	Closing pressure (bar)	160	160	160	160	160	160	160	160	160	160	160	160	160	160
	Operating time [2] (s) (Op. speed 0,38 mm/s)	53			79	53			79		53		79		
Actuator [1] **ARI-PREMIO 12 kN**	Closing pressure (bar)	160	160	160	160	160	160	160	160	160	160	160	160	160	160
	Operating time [2] (s) (Op. speed 0,38 mm/s)	53			79	53			79		53		79		
Actuator [1] **ARI-PREMIO 15 kN**	Closing pressure (bar)														
	Operating time [2] (s) (Op. speed 0,38 mm/s)														

DN		80					100					125				
Kvs-value	Seat-Ø (mm)	32	40	50	65	80	40	50	65	80	100	50	65	80	100	125
	Parabolic plug	16	25	40	63	100	25	40	63	100	160	40	63	100	160	200
	Perforated plug	--	16	25	40	63	--	25	40	63	100	--	40	63	100	160
	Travel (mm)	20	30	30	30	40	30	30	30	40	40	30	30	40	40	40
Max. differential pressure drop (bar)	Parabolic plug	30	30	30	30	15	30	30	15	30	30	30	30	30	30	30
	Perforated plug	--	40	40	40	40	--	40	40	40	40	40	40	40	40	40
Actuator [1] **ARI-PREMIO 5 kN**	Closing pressure (bar)	135	130	120	105	95	130	120	105	95	75	120	105	95	75	60
	Operating time [2] (s) (Op. speed 0,38 mm/s)	53	79			105	79			105		105				
Actuator [1] **ARI-PREMIO 12 kN**	Closing pressure (bar)	160	160	160	160	160	160	160	160	160	160	160	160	160	160	160
	Operating time [2] (s) (Op. speed 0,38 mm/s)	53	79			105	79			105		105				
Actuator [1] **ARI-PREMIO 15 kN**	Closing pressure (bar)	160	160	160	160	160	160	160	160	160	160	160	160	160	160	160
	Operating time [2] (s) (Op. speed 0,38 mm/s)	53	79			105	79			105		105				

[1] Motor voltage: 230V 50Hz
Other voltages: 24V 50/60Hz; 115V 50/60Hz; 230V 60Hz
Technical data for actuator refer to data sheet ARI-PREMIO.

[2] Indicated operating times with 50Hz.

Control valve in straightway form with electric actuator AUMA

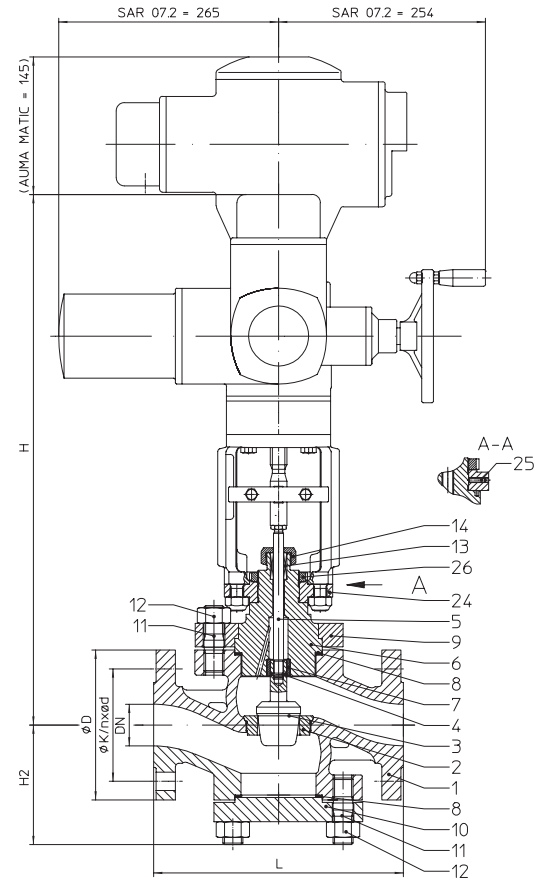

Fig. 472....1

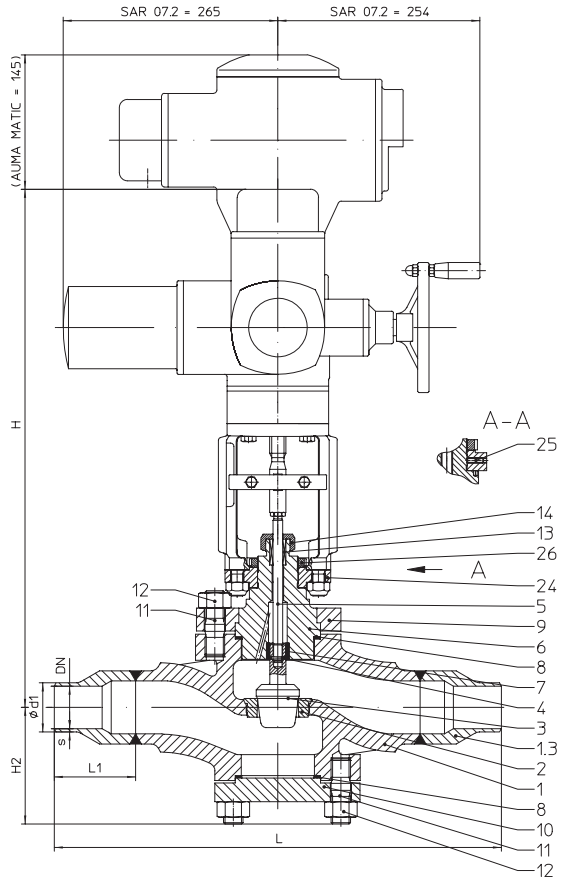

Fig. 472....4

Figure	Nominal pressure	Material	Nominal diameter
36.472	PN63	1.0619+N	DN15-125
37.472	PN100	1.0619+N	DN15-125
38.472	PN160	1.0619+N	DN15-125
86.472	PN63	1.7379	DN15-125
87.472	PN100	1.7379	DN15-125
88.472	PN160	1.7379	DN15-125
Other materials and versions on request.			

Stem sealing
- Pure graphite-packing -10°C to 550°C

Plug design
standard: • Parabolic plug, metal seat
optional:
- Perforated plug, metal seat (from DN25)
- Pressure balanced plug, metal seat.
  Material of piston seal:
  O-ring and glyd ring (max. 200°C)
  multi-plate rings (max. 450°C)
  piston rings (max. 550°C)

Guiding
- Parabolic plug: post guiding
- Perforated plug: post- and port guiding

Flow characteristic
- Equal percentage or linear
  (Perforated plug only linear)

Rangeability
- 25 : 1

Shut off class (seat / plug leakage classes) acc. to IEC 60534-4
standard: • Metal / metal - Leakage class IV
optional:
- Metal / metal - Pressure balanced plug with O-ring and glyd ring, Leakage class III
- Metal / metal - Pressure balanced plug with multi-plate rings or piston rings, Leakage class II

Closing pressures refer to page 10-12.

Technical data for actuator refer to data sheet.

Selection of possible applications

Industrial installations, processing technology, plant manufacturing, etc.
(other applications on request)

Selection of possible flow media

Water and steam

Dimensions and weights

DN				15	25	40	50	65	80	100	125
L			(mm)	210	230	260	300	340	380	430	500
H2			(mm)	111	111	144	144	144	195	195	220
Fig. 472....1	H		(mm)	621	621	662	662	662	719	719	790
	H (extended bonnet) [1]		(mm)	721	721	762	762	762	869	869	940
	AUMA SAR 07.2	PN63-160	(kg)	44,3	51,3	66,3	77,8	82,8	107,8	143	237

Standard-flange dimensions refer to page 23. Face-to-face dimension FTF series 2 acc. to DIN EN 558

DN				15	25	40	50	65	80	100	125
L			(mm)	450		560 (450)			800 (560/450)	800 (560)	900 (800)
L1			(mm)	75		100 (75)			125 (100/75)	125 (100)	130 (125)
H2			(mm)	111		144 (111)			195 (144/111)	195 (144)	220 (195)
Fig. 472....4	H		(mm)	621		662 (621)			719 (662/621)	719 (662)	790 (719)
	H (extended bonnet) [1]		(mm)	721		762 (721)			869 (762/721)	869 (762)	940 (869)
	AUMA SAR 07.2	PN63-160	(kg)	46,3		77,8 (46,3)			108 (77,8/46,3)	108 (77,8)	195 (108)

Shoed butt weld ends refer to page 23. **(For version with AUMA SAR Ex other heights.)**

[1] at media temperatures >400°C (refer to page 24) (Values in brackets for reduced travels.)

Parts

Pos.	Description	Fig. 36./37./38.472....1	Fig. 36./37./38.472....4	Fig. 86./87./88.472....1	Fig. 86./87./88.472....4
1	Body	GP240GH+N, 1.0619+N		G17CrMo9-10, 1.7379	
1.3	Shoed butt weld end	--	P250 GH, 1.0460 (optional: 16Mo3, 1.5415)	--	16Mo3, 1.5415 (optional: 11CrMo9-10, 1.7383)
2	Seat ring *	X6CrNiMoTi17-12-2, 1.4571			
3	Plug *	X6CrNiMoTi17-12-2, 1.4571			
4	Straight pin *	X6CrNiMoTi17-12-2, 1.4571			
5	Stem *	X39CrMo17-1+QT, 1.4122+QT			
6	Stuffing box housing	X6CrNiMoTi17-12-2, 1.4571			
7	Guide bushing	X17CrNi16-2, 1.4057			
8	Gasket *	Pure graphite (CrNi laminated with graphite)			
9	Clamping flange	P250 GH, 1.0460 or P265 GH, 1.0425		16Mo3, 1.5415 (optional: 11CrMo9-10, 1.7383)	
10	Flange	P250 GH, 1.0460 or P265 GH, 1.0425		16Mo3, 1.5415 (optional: 11CrMo9-10, 1.7383)	
11	Studs	25CrMo4, 1.7218		21CrMoV 5-7, 1.7709	
12	Hexagon nuts	C35E, 1.1181		25CrMo4, 1.7218	
13	Packing ring *	Pure graphite			
14	Sleeve nut	X5CrNi18-10, 1.4301			
24	Mounting bonnet	S235JR, 1.0037			
25	Grub screw	45H-A2K			
26	Slotted nut	5.8-A2G			

For applications above 400°C the materials may differ!

* Spare parts

Information / restriction of technical rules need to be observed!

The engineer, designing a system or a plant, is responsible for the selection of the correct valve.

max. permissible closing pressures on flow-to-open P2 = 0.
Observe restrictions by Pressure-temperature-ratings, refer to page 23.

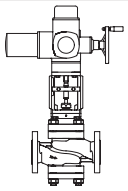

Fig. 472 with flanges

DN			15			25			40				50					65				
Kvs-value	Seat-Ø (mm)		6	12	20	12	20	26	20	26	32	40	20	26	32	40	50	26	32	40	50	65
	Parabolic plug		0,4	1,6 / 1,0 / 0,63	2,5 / 4	1,6 / 1,0 / 0,63	6,3 / 4,0 / 2,5	10	6,3 / 4,0 / 2,5	10	16	25	6,3	10	16	25	40	10	16	25	40	63
	Perforated plug		--	--	2,5	--	2,5 / 4	6,3	4	6,3	10	16	--	6,3	10	16	25	--	10	16	25	40
	Travel (mm)		20	20	20	20	20	20	30	30	30	30	30	30	30	30	30	30	30	30	30	30
Max. differential pressure drop (bar)	Parabolic plug		30	30	30	30	30	30	30	30	30	30	30	30	30	30	30	30	30	30	30	15
	Perforated plug		40	40	40	40	40	40	40	40	40	40	40	40	40	40	40	40	40	40	40	40
Actuator [1] **AUMA SAR 07.2** Output drive Form A TR 20 x 4 - LH	Closing pressure (bar)	shut off	160	160	160	160	160	160	160	160	128,3	81,4	160	160	128,3	81,4	51,5	160	128,3	81,4	51,5	29,9
		controlling [3]	160	160	160	160	160	112	160	112	73,1	46	160	112	73,1	46	28,9	112	73,1	46	28,9	16,5
	Torque (Nm)		25																			
	Operating time [2] (s)		54						56													
	Output drive (rpm)		5,6						8													

DN			80					100					125				
Standard [4] Kvs-value	Seat-Ø (mm)		32	40	50	65	80	40	50	65	80	100	50	65	80	100	125
	Parabolic plug		16	25	40	63	100	25	40	63	100	160	40	63	100	160	200
	Perforated plug		--	16	25	40	63	--	25	40	63	100	--	40	63	100	160
	Travel (mm)		40	40	40	40	40	40	40	40	40	40	40	40	40	40	40
Max. differential pressure drop (bar)	Parabolic plug		30	30	30	30	30	30	30	30	30	30	30	30	30	30	30
	Perforated plug		40	40	40	40	40	40	40	40	40	40	40	40	40	40	40
Actuator [1] **AUMA SAR 07.2** Output drive Form A TR 20 x 4 - LH	Closing pressure (bar)	shut off	154,3	98	62,1	36,2	23,6	98	62,1	36,2	23,6	14,8	62,1	36,2	23,6	14,8	9,2
		controlling [3]	71,4	44,9	28,2	16,1	10,3	44,9	28,2	16,1	10,3	6,3	28,2	16,1	10,3	6,3	3,8
	Torque (Nm)		30														
	Operating time [2] (s)		75														
	Output drive (rpm)		8														

[1] Motor voltage: 400V 50Hz 3~
(Other voltages on request)
Technical data for actuator refer to price list.

[2] Indicated operating times with 50Hz.

[3] Restrictions through max. permissible torque of the actuator at controlling operation.

max. permissible closing pressures on flow-to-open P2 = 0.
Observe restrictions by Pressure-temperature-ratings, refer to page 23.

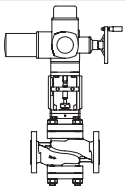

Fig. 472 with flanges and Pressure balanced plug

DN			40				50					65				
Kvs-value	Seat-Ø (mm)		20	26	32	40	20	26	32	40	50	26	32	40	50	65
	Parabolic plug		6,3 / 4,0 / 2,5	10	16	25	6,3	10	16	25	40	10	16	25	40	63
	Perforated plug		4	6,3	10	16	--	6,3	10	16	25	--	10	16	25	40
	Travel (mm)		30	30	30	30	30	30	30	30	30	30	30	30	30	30
Max. differential pressure drop (bar)	Parabolic plug		30	30	30	30	30	30	30	30	30	30	30	30	30	15
	Perforated plug		40	40	40	40	40	40	40	40	40	40	40	40	40	40
Actuator [1] **AUMA SAR 07.2** Output drive Form A TR 20 x 4 - LH	Closing pressure (bar)	shut off	160	160	160	160	160	160	160	160	160	160	160	160	160	160
		controlling [3]	160	160	160	160	160	160	160	160	160	160	160	160	160	160
	Torque (Nm)		25													
	Operating time [2] (s)		56													
	Output drive (rpm)		8													

DN			80					100					125				
Kvs-value	Seat-Ø (mm)		32	40	50	65	80	40	50	65	80	100	50	65	80	100	125
	Parabolic plug		16	25	40	63	100	25	40	63	100	160	40	63	100	160	200
	Perforated plug		--	16	25	40	63	--	25	40	63	100	--	40	63	100	160
	Travel (mm)		40	40	40	40	40	40	40	40	40	40	40	40	40	40	40
Max. differential pressure drop (bar)	Parabolic plug		30	30	30	30	30	30	30	30	30	30	30	30	30	30	30
	Perforated plug		40	40	40	40	40	40	40	40	40	40	40	40	40	40	40
Actuator [1] **AUMA SAR 07.2** Output drive Form A TR 20 x 4 - LH	Closing pressure (bar)	shut off	160	160	160	160	160	160	160	160	160	160	160	160	160	160	160
		controlling [3]	160	160	160	160	160	160	160	160	160	160	160	160	160	160	160
	Torque (Nm)		30														
	Operating time [2] (s)		75														
	Output drive (rpm)		8														

[1] Motor voltage: 400V 50Hz 3~
(Other voltages on request)
Technical data for actuator refer to price list.

[2] Indicated operating times with 50Hz.

[3] Restrictions through max. permissible torque of the actuator at controlling operation.

max. permissible closing pressures on flow-to-open P2 = 0.
Observe restrictions by Pressure-temperature-ratings, refer to page 23.

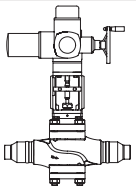

Fig. 472 with butt weld ends

DN			15			25			40				50					65				
Kvs-value	Seat-Ø (mm)		6	12	20	12	20	26	20	26	32	40	20	26	32	40	50	26	32	40	50	65
	Parabolic plug		0,4	1,6 / 1,0 / 0,63	2,5 / 4	1,6 / 1,0 / 0,63	6,3 / 4,0 / 2,5	10	6,3 / 4,0 / 2,5	10	16	25	6,3	10	16	25	40	10	16	25	40	63
	Perforated plug		--	--	2,5	--	2,5 / 4	6,3	4	6,3	10	16	--	6,3	10	16	25	--	10	16	25	40
	Travel (mm)		20	20	20	20	20	20	20	20	20	30	20	20	20	30	30	20	20	30	30	30
Max. differential pressure drop (bar)	Parabolic plug		30	30	30	30	30	30	30	30	30	30	30	30	30	30	30	30	30	30	30	15
	Perforated plug		--	--	40	--	40	40	40	40	40	40	--	40	40	40	40	--	40	40	40	40
Actuator [1] **AUMA SAR 07.2** Output drive Form A TR 20 x 4 - LH	Closing pressure (bar)	shut off	160	160	160	160	160	160	160	160	128,3	81,4	160	160	128,3	81,4	51,5	160	128,3	81,4	51,5	29,9
		controlling [3]	160	160	160	160	160	112	160	112	73,1	46	160	112	73,1	46	28,9	112	73,1	46	28,9	16,5
	Torque (Nm)		25																			
	Operating time [2] (s)		54									56	54			56		54		56		
	Output drive (rpm)		5,6									8	5,6			8		5,6		8		

DN			80					100					125				
Standard [4] Kvs-value	Seat-Ø (mm)		32	40	50	65	80	40	50	65	80	100	50	65	80	100	125
	Parabolic plug		16	25	40	63	100	25	40	63	100	160	40	63	100	160	200
	Perforated plug		--	16	25	40	63	--	25	40	63	100	--	40	63	100	160
	Travel (mm)		20	30	30	30	40	30	30	30	40	40	30	30	40	40	40
Max. differential pressure drop (bar)	Parabolic plug		30	30	30	30	15	30	30	15	30	30	30	30	30	30	30
	Perforated plug		--	40	40	40	40	--	40	40	40	40	40	40	40	40	40
Actuator [1] **AUMA SAR 07.2** Output drive Form A TR 20 x 4 - LH	Closing pressure (bar)	shut off	128,3	81,4	51,5	29,9	23,6	81,4	51,5	29,9	23,6	14,8	51,5	29,9	23,6	14,8	9,2
		controlling [3]	73,1	46	28,9	16,5	10,3	46	28,9	16,5	10,3	6,3	28,9	16,5	10,3	6,3	3,8
	Torque (Nm)		25				30	25			30		25		30		
	Operating time [2] (s)		54	56			75	56			75		56		75		
	Output drive (rpm)		5,6	8													

[1] Motor voltage: 400V 50Hz 3~
(Other voltages on request)
Technical data for actuator refer to price list.

[2] Indicated operating times with 50Hz.

[3] Restrictions through max. permissible torque of the actuator at controlling operation.

max. permissible closing pressures on flow-to-open P2 = 0.
Observe restrictions by Pressure-temperature-ratings, refer to page 23.

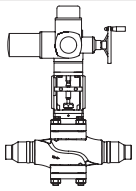

Fig. 472 with butt weld ends and Pressure balanced plug

DN			40				50					65				
Kvs-value	Seat-Ø (mm)		20	26	32	40	20	26	32	40	50	26	32	40	50	65
	Parabolic plug		6,3 / 4,0 / 2,5	10	16	25	6,3	10	16	25	40	10	16	25	40	63
	Perforated plug		4	6,3	10	16	--	6,3	10	16	25	--	10	16	25	40
	Travel (mm)		20	20	20	30	20	20	20	30	30	20	20	30	30	30
Max. differential pressure drop (bar)	Parabolic plug		30	30	30	30	30	30	30	30	30	30	30	30	30	15
	Perforated plug		40	40	40	40	40	40	40	40	40	40	40	40	40	40
Actuator [1] **AUMA SAR 07.2** Output drive Form A TR 20 x 4 - LH	Closing pressure (bar)	shut off	160	160	160	160	160	160	160	160	160	160	160	160	160	160
		controlling [3]	160	160	160	160	160	160	160	160	160	160	160	160	160	160
	Torque (Nm)		25													
	Operating time [2] (s)		54			56	54			56		54		56		
	Output drive (rpm)		5,6			8	5,6			8		5,6		8		

DN			80					100					125				
Kvs-value	Seat-Ø (mm)		32	40	50	65	80	40	50	65	80	100	50	65	80	100	125
	Parabolic plug		16	25	40	63	100	25	40	63	100	160	40	63	100	160	200
	Perforated plug		--	16	25	40	63	--	25	40	63	100	--	40	63	100	160
	Travel (mm)		20	30	30	30	40	30	30	30	40	40	30	30	40	40	40
Max. differential pressure drop (bar)	Parabolic plug		30	30	30	30	15	30	30	15	30	30	30	30	30	30	30
	Perforated plug		--	40	40	40	40	--	40	40	40	40	40	40	40	40	40
Actuator [1] **AUMA SAR 07.2** Output drive Form A TR 20 x 4 - LH	Closing pressure (bar)	shut off	160	160	160	160	160	160	160	160	160	160	160	160	160	160	160
		controlling [3]	160	160	160	160	160	160	160	160	160	160	160	160	160	160	160
	Torque (Nm)		25				30	25			30		25		30		
	Operating time [2] (s)		54	56			75	56			75		56		75		
	Output drive (rpm)		5,6	8													

[1] Motor voltage: 400V 50Hz 3~
(Other voltages on request)
Technical data for actuator refer to price list.

[2] Indicated operating times with 50Hz.

[3] Restrictions through max. permissible torque of the actuator at controlling operation.

Control valve in straightway form with pneumatic actuator DP

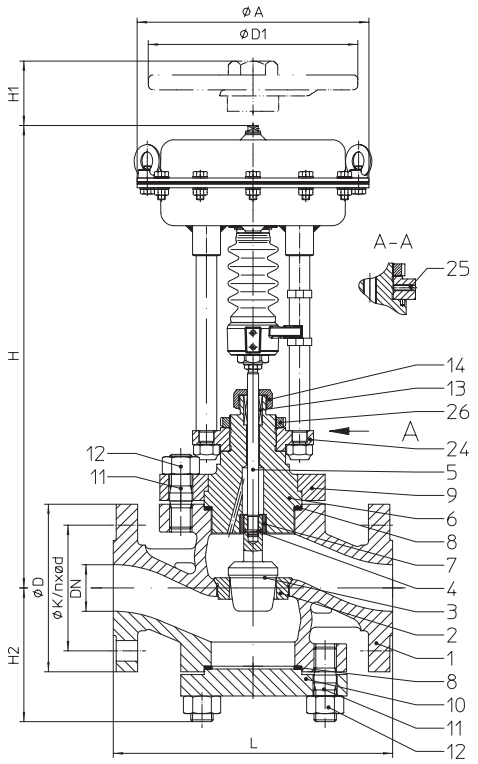

Fig. 472....1

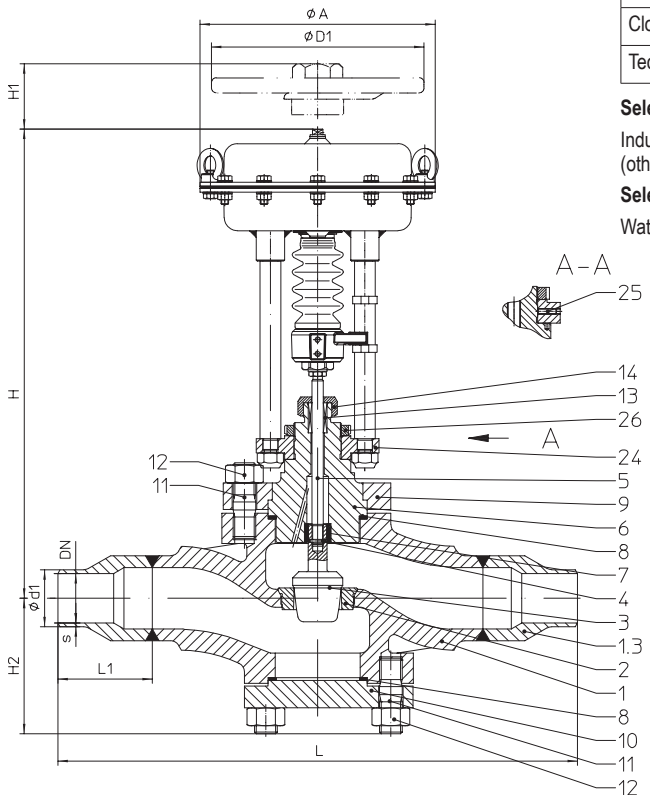

Fig. 472....4

Figure	Nominal pressure	Material	Nominal diameter
36.472	PN63	1.0619+N	DN15-125
37.472	PN100	1.0619+N	DN15-125
38.472	PN160	1.0619+N	DN15-125
86.472	PN63	1.7379	DN15-125
87.472	PN100	1.7379	DN15-125
88.472	PN160	1.7379	DN15-125
Other materials and versions on request.			

Stem sealing
- Pure graphite-packing -10°C to 550°C

Plug design
standard: • Parabolic plug, metal seat
optional:
- Perforated plug, metal seat (from DN25)
- Pressure balanced plug, metal seat.
  Material of piston seal:
  O-ring and glyd ring (max. 200°C)
  multi-plate rings (max. 450°C)
  piston rings (max. 550°C)

Guiding
- Parabolic plug: post guiding
- Perforated plug: post- and port guiding

Flow characteristic
- Equal percentage or linear
  (Perforated plug only linear)

Rangeability
- 25 : 1

Shut off class (seat / plug leakage classes) acc. to IEC 60534-4
standard: • Metal / metal - Leakage class IV
optional:
- Metal / metal - Pressure balanced plug with O-ring and glyd ring, Leakage class III
- Metal / metal - Pressure balanced plug with multi-plate rings or piston rings, Leakage class II

Closing pressures refer to page 16-22.

Technical data for actuator refer to data sheet.

Selection of possible applications

Industrial installations, processing technology, plant manufacturing, etc.
(other applications on request)

Selection of possible flow media

Water and steam

Top mounted handwheel

Actuator		DP32	DP33	DP34
Ø D1	(mm)	225	300	400
H1	(mm)	270	284	442
Weight	(kg)	5	8	17
Technical data for actuator refer to data sheet DP32-35.				

Dimensions and weights

DN				15	25	40	50	65	80	100	125
L			(mm)	210	230	260	300	340	380	430	500
H2			(mm)	111	111	144	144	144	195	195	220
Fig. 472....1	DP32	H	(mm)	467	467	508	508	508	--	--	--
		H (extended bonnet) [1]	(mm)	567	567	608	608	608	--	--	--
		PN63-160	(kg)	27	34	49	59	64	--	--	--
Fig. 472....1	DP33	H	(mm)	522	522	563	563	563	--	--	--
		H (extended bonnet) [1]	(mm)	622	622	663	663	663	--	--	--
		PN63-160	(kg)	33	40	55	65	70	--	--	--
Fig. 472....1	DP34	H	(mm)	--	--	--	--	--	755	755	811
		H (extended bonnet) [1]	(mm)	--	--	--	--	--	905	905	961
		PN63-160	(kg)	--	--	--	--	--	125	160	253

Standard-flange dimensions refer to page 23. Face-to-face dimension FTF series 2 acc. to DIN EN 558

DN				15	25	40	50	65	80	100	125
L			(mm)	450		560 (450)			800 (560/450)	800 (560)	900 (800)
L1			(mm)	75		100 (75)			125 (100/75)	125 (100)	130 (125)
H2			(mm)	111		144 (111)			195 (144/111)	195 (144)	220 (195)
Fig. 472....4	DP32	H	(mm)	467		508 (467)			467	--	--
		H (extended bonnet) [1]	(mm)	567		608 (567)			567	--	--
		PN63-160	(kg)	29		59 (29)			29	--	--
Fig. 472....4	DP33	H	(mm)	522		563 (522)			563	563	811
		H (extended bonnet) [1]	(mm)	622		663 (622)			663	663	961
		PN63-160	(kg)	35		65 (35)			65	65	182
Fig. 472....4	DP34	H	(mm)	--	--	--	--	--	755	755	801
		H (extended bonnet) [1]	(mm)	--	--	--	--	--	905	905	951
		PN63-160	(kg)	--	--	--	--	--	125	125	212

Shoed butt weld ends refer to page 23.

[1] at media temperatures >300°C (refer to page 24) (Values in brackets for reduced travels.)

Parts

Pos.	Description	Fig. 36./37./38.472....1	Fig. 36./37./38.472....4	Fig. 86./87./88.472....1	Fig. 86./87./88.472....4
1	Body	GP240GH+N, 1.0619+N		G17CrMo9-10, 1.7379	
1.3	Shoed butt weld end	--	P250 GH, 1.0460 (optional: 16Mo3, 1.5415)	--	16Mo3, 1.5415 (optional: 11CrMo9-10, 1.7383)
2	Seat ring *	X6CrNiMoTi17-12-2, 1.4571			
3	Plug *	X6CrNiMoTi17-12-2, 1.4571			
4	Straight pin *	X6CrNiMoTi17-12-2, 1.4571			
5	Stem *	X39CrMo17-1+QT, 1.4122+QT			
6	Stuffing box housing	X6CrNiMoTi17-12-2, 1.4571			
7	Guide bushing	X17CrNi16-2, 1.4057			
8	Gasket *	Pure graphite (CrNi laminated with graphite)			
9	Clamping flange	P250 GH, 1.0460 or P265 GH, 1.0425		16Mo3, 1.5415 (optional: 11CrMo9-10, 1.7383)	
10	Flange	P250 GH, 1.0460 or P265 GH, 1.0425		16Mo3, 1.5415 (optional: 11CrMo9-10, 1.7383)	
11	Studs	25CrMo4, 1.7218		21CrMoV 5-7, 1.7709	
12	Hexagon nuts	C35E, 1.1181		25CrMo4, 1.7218	
13	Packing ring *	Pure graphite			
14	Sleeve nut	X5CrNi18-10, 1.4301			
24	Mounting bonnet	S235JR, 1.0037			
25	Grub screw	45H-A2K			
26	Slotted nut	5.8-A2G			

For applications above 400°C the materials may differ!

* Spare parts

Information / restriction of technical rules need to be observed!

The engineer, designing a system or a plant, is responsible for the selection of the correct valve.

max. permissible closing pressures on flow-to-open P2 = 0.
Observe restrictions by Pressure-temperature-ratings, refer to page 23.

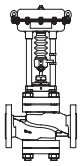

Fig. 472 with flanges: Spring closes on air failure

DN					15			25			40				50					65				
Kvs-value		Seat-Ø (mm)			6	12	20	12	20	26	20	26	32	40	20	26	32	40	50	26	32	40	50	65
		Parabolic plug			0,4	1,6 / 1,0 / 0,63	2,5 / 4	1,6 / 1,0 / 0,63	6,3 / 4,0 / 2,5	10	6,3 / 4,0 / 2,5	10	16	25	6,3	10	16	25	40	10	16	25	40	63
		Perforated plug			--	--	2,5	--	2,5 / 4	6,3	4	6,3	10	16	--	6,3	10	16	25	--	10	16	25	40
		Travel (mm)			20	20	20	20	20	20	30	30	30	30	30	30	30	30	30	30	30	30	30	30
Max. differential pressure drop (bar)		Parabolic plug			30	30	30	30	30	30	30	30	30	30	30	30	30	30	30	30	30	30	30	15
		Perforated plug			40	40	40	40	40	40	40	40	40	40	40	40	40	40	40	40	40	40	40	40
Actuator DP32	Spring range (bar)	1,5-2,5	Air supply pressure min. (bar)	2,8	160	160	73	160	73	41,8														
Actuator DP32	Spring range (bar)	2,0-3,3	Air supply pressure min. (bar)	3,6	160	160	104,1	160	104,1	60,3														
Actuator DP33	Spring range (bar)	1,5-3,0 (1,7-2,7)	Air supply pressure min. (bar)	3,3 (3,1)	(160)	(160)	(148,2)	(160)	(148,2)	(86,4)	128,3	74,6	48,4	30,2	128,3	74,6	48,4	30,2	18,7	74,6	48,4	30,2	18,7	10,6
Actuator DP33	Spring range (bar)	2,0-4,0 (2,3-3,7)	Air supply pressure min. (bar)	4,5 (4)	(160)	(160)	(160)	(160)	(160)	(121,6)	160	104	67,8	42,6	160	104	67,8	42,6	26,7	104	67,8	42,6	26,7	15,3

DN					80					100					125				
Kvs-value		Seat-Ø (mm)			32	40	50	65	80	40	50	65	80	100	50	65	80	100	125
		Parabolic plug			16	25	40	63	100	25	40	63	100	160	40	63	100	160	200
		Perforated plug			--	16	25	40	63	--	25	40	63	100	--	40	63	100	160
		Travel (mm)			40	40	40	40	40	40	40	40	40	40	40	40	40	40	40
Max. differential pressure drop (bar)		Parabolic plug			30	30	30	30	30	30	30	30	30	30	30	30	30	30	30
		Perforated plug			40	40	40	40	40	40	40	40	40	40	40	40	40	40	40
Actuator DP34	Spring range (bar)	1,5-2,7	Air supply pressure min. (bar)	3,1	105,6a)	66,8a)	42,2a)	24,4a)	15,8a)	66,8a)	42,2a)	24,4a)	15,8a)	9,8a)	42,2 a)	24,4 a)	15,8 a)	9,8 a)	6 a)
Actuator DP34	Spring range (bar)	2,0-3,6	Air supply pressure min. (bar)	4	144,6	91,8	58,2	33,9	22	91,8	58,2	33,9	22	13,8	58,2	33,9	22	13,8	8,6

Air supply pressure max. of pneumatic actuators DP: max. permissible 6 bar
Air supply pressure max. limit of control valve: max. permissible a) 5 bar b) 4,5 bar c) 4 bar d) 3,5 bar e) 3 bar

Closing pressures **for Fig. 472 pressure balanced plug refer to page 18.**

max. permissible closing pressures on flow-to-open P2 = 0.
Observe restrictions by Pressure-temperature-ratings, refer to page 23.

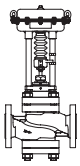

Fig. 472 with flanges: Spring opens on air failure

DN			15			25			40				50					65				
Kvs-value	Seat-Ø (mm)		6	12	20	12	20	26	20	26	32	40	20	26	32	40	50	26	32	40	50	65
	Parabolic plug		0,4	1,6 / 1,0 / 0,63	2,5 / 4	1,6 / 1,0 / 0,63	6,3 / 4,0 / 2,5	10	6,3 / 4,0 / 2,5	10	16	25	6,3	10	16	25	40	10	16	25	40	63
	Perforated plug		--	--	2,5	--	2,5 / 4	6,3	4	6,3	10	16	--	6,3	10	16	25	--	10	16	25	40
	Travel (mm)		20	20	20	20	20	20	30	30	30	30	30	30	30	30	30	30	30	30	30	30
Max. differential pressure drop (bar)	Parabolic plug		30	30	30	30	30	30	30	30	30	30	30	30	30	30	30	30	30	30	30	15
	Perforated plug		40	40	40	40	40	40	40	40	40	40	40	40	40	40	40	40	40	40	40	40
Actuator DP32	Air supply pressure min. (bar)	2	160	155,4	52,2	155,4	52,2	29,2	52,2	29,2	18,2	10,7	52,2	29,2	18,2	10,7	6,1	29,2	18,2	10,7	6,1	2,9
		3		160	130,2	160	130,2	75,4	130,2	75,4	48,7	30,2	130,2	75,4	48,7	30,2	18,6	75,4	48,7	30,2	18,6	10,3
		4			160		160	121,5	160	121,5	79,1	49,7	160	121,5	79,1	49,7	31,1	121,5	79,1	49,7	31,1	17,7
		5						160		160	109,6	69,2		160	109,6	69,2	43,5	160	109,6	69,2	43,5	25,1
		6									140,1	88,7			140,1	88,7	56		140,1	88,7	56	32,5
Actuator DP33		2	160	160	98,4	160	98,4	56,5	98,4	56,5	36,2	22,2	98,4	56,5	36,2	22,2	13,5	56,5	36,2	22,2	13,5	7,3
		3			160		160	130	160	130	84,7	53,3	160	130	84,7	53,3	33,4	130	84,7	53,3	33,4	19,1
		4						160		160	133,2	84,3		160	133,2	84,3	53,2	160	133,2	84,3	53,2	30,8

DN			80					100					125				
Kvs-value	Seat-Ø (mm)		32	40	50	65	80	40	50	65	80	100	50	65	80	100	125
	Parabolic plug		16	25	40	63	100	25	40	63	100	160	40	63	100	160	200
	Perforated plug		--	16	25	40	63	--	25	40	63	100	--	40	63	100	160
	Travel (mm)		40	40	40	40	40	40	40	40	40	40	40	40	40	40	40
Max. differential pressure drop (bar)	Parabolic plug		30	30	30	30	30	30	30	30	30	30	30	30	30	30	30
	Perforated plug		40	40	40	40	40	40	40	40	40	40	40	40	40	40	40
Actuator DP34	Air supply pressure min. (bar)	2	98,8	62,3	39,1	22,5	14,4	62,3	39,1	22,5	14,4	8,8	39,1	22,5	14,4	8,8	5,4
		3	160	124,8	79,1	46,1	30	124,8	79,1	46,1	30	18,8	79,1	46,1	30	18,8	11,8
		4		160	119,1	69,8	45,6	160	119,1	69,8	45,6	28,8	119,1	69,8	45,6	28,8	18,2

Air supply pressure max. of pneumatic actuators DP:	max. permissible	6 bar
Air supply pressure max. limit of control valve:	max. permissible	a) 5 bar b) 4,5 bar c) 4 bar d) 3,5 bar e) 3 bar

Closing pressures **for Fig. 472 pressure balanced plug refer to page 18.**

max. permissible closing pressures on flow-to-open P2 = 0.
Observe restrictions by Pressure-temperature-ratings, refer to page 23.

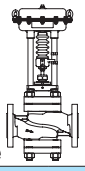

Fig. 472 with flanges Pressure balanced plug spring closes on air failure

DN					25		40				50					65				
Kvs-value		Seat-Ø (mm)			20	26	20	26	32	40	20	26	32	40	50	26	32	40	50	65
		Parabolic plug			6,3 / 4,0 / 2,5	10	6,3 / 4,0 / 2,5	10	16	25	6,3	10	16	25	40	10	16	25	40	63
		Perforated plug			2,5 / 4	6,3	4	6,3	10	16	--	6,3	10	16	25	--	10	16	25	40
		Travel (mm)			20	20	30	30	30	30	30	30	30	30	30	30	30	30	30	30
Max. differential pressure drop (bar)		Parabolic plug			30	30	30	30	30	30	30	30	30	30	30	30	30	30	30	15
		Perforated plug			40	40	40	40	40	40	40	40	40	40	40	40	40	40	40	40
Actuator **DP32**	Spring range (bar)	1,5-2,5	Air supply pressure min. (bar)	2,8	160	160														
Actuator **DP33**	Spring range (bar)	1,5-3,0	Air supply pressure min. (bar)	3,3			160	160	160	160	160	160	160	160	160	160	160	160	160	160

DN					80					100					125				
Kvs-value		Seat-Ø (mm)			32	40	50	65	80	40	50	65	80	100	50	65	80	100	125
		Parabolic plug			16	25	40	63	100	25	40	63	100	160	40	63	100	160	200
		Perforated plug			--	16	25	40	63	--	25	40	63	100	--	40	63	100	160
		Travel (mm)			40	40	40	40	40	40	40	40	40	40	40	40	40	40	40
Max. differential pressure drop (bar)		Parabolic plug			30	30	30	30	30	30	30	30	30	30	30	30	30	30	30
		Perforated plug			40	40	40	40	40	40	40	40	40	40	40	40	40	40	40
Actuator **DP34**	Spring range (bar)	1,5-2,7	Air supply pressure min. (bar)	3,1	160a)	160a)	160a)	160a)	160a)	160a)	160a)	160a)	160a)	160a)	160a)	160a)	160a)	160a)	160a)

Air supply pressure max. of pneumatic actuators DP:	max. permissible	6 bar
Air supply pressure max. limit of control valve:	max. permissible	a) 5 bar b) 4,5 bar c) 4 bar d) 3,5 bar e) 3 bar

max. permissible closing pressures on flow-to-open P2 = 0.
Observe restrictions by Pressure-temperature-ratings, refer to page 23.

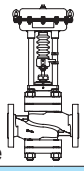

Fig. 472 with flanges Pressure balanced plug Spring opens on air failure

DN			40				50					65				
Kvs-value	Seat-Ø (mm)		20	26	32	40	20	26	32	40	50	26	32	40	50	65
	Parabolic plug		6,3 / 4,0 / 2,5	10	16	25	6,3	10	16	25	40	10	16	25	40	63
	Perforated plug		4	6,3	10	16	--	6,3	10	16	25	--	10	16	25	40
	Travel (mm)		30	30	30	30	30	30	30	30	30	30	30	30	30	30
Max. differential pressure drop (bar)	Parabolic plug		30	30	30	30	30	30	30	30	30	30	30	30	30	15
	Perforated plug		40	40	40	40	40	40	40	40	40	40	40	40	40	40
Actuator **DP32**	erforderlicher Stelldruck (bar)	3	160	160	160	160	160	160	160	160	160	160	160	160	160	160

DN			80					100					125				
Kvs-value	Seat-Ø (mm)		32	40	50	65	80	40	50	65	80	100	50	65	80	100	125
	Parabolic plug		16	25	40	63	100	25	40	63	100	160	40	63	100	160	200
	Perforated plug		--	16	25	40	63	--	25	40	63	100	--	40	63	100	160
	Travel (mm)		40	40	40	40	40	40	40	40	40	40	40	40	40	40	40
Max. differential pressure drop (bar)	Parabolic plug		30	30	30	30	30	30	30	30	30	30	30	30	30	30	30
	Perforated plug		40	40	40	40	40	40	40	40	40	40	40	40	40	40	40
Actuator **DP34**	erforderlicher Stelldruck (bar)	2	160	160	160c)	160c)	160c)	160	160	160c)	160c)	160c)	160c)	160c)	160c)	160c)	160c)

Air supply pressure max. of pneumatic actuators DP:	max. permissible	6 bar
Air supply pressure max. limit of control valve:	max. permissible	a) 5 bar b) 4,5 bar c) 4 bar d) 3,5 bar e) 3 bar

max. permissible closing pressures on flow-to-open P2 = 0.
Observe restrictions by Pressure-temperature-ratings, refer to page 23.

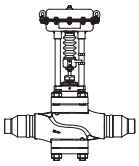

Fig. 472 with butt weld ends: Spring closes on air failure

DN					15			25			40				50					65				
Kvs-value		Seat-Ø (mm)			6	12	20	12	20	26	20	26	32	40	20	26	32	40	50	26	32	40	50	65
		Parabolic plug			0,4	1,6 / 1,0 / 0,63	2,5 / 4	1,6 / 1,0 / 0,63	6,3 / 4,0 / 2,5	10	6,3 / 4,0 / 2,5	10	16	25	6,3	10	16	25	40	10	16	25	40	63
		Perforated plug			--	--	2,5	--	2,5 / 4	6,3	4	6,3	10	16	--	6,3	10	16	25	--	10	16	25	40
		Travel (mm)			20	20	20	20	20	20	20	20	20	30	20	20	20	30	30	20	20	30	30	30
Max. differential pressure drop (bar)		Parabolic plug			30	30	30	30	30	30	30	30	30	30	30	30	30	30	30	30	30	30	30	15
		Perforated plug			--	--	40	--	40	40	40	40	40	40	--	40	40	40	40	--	40	40	40	40
Actuator DP32	Spring range (bar)	1,5-2,5	Air supply pressure min. (bar)	2,8	160	160	73	160	73	41,8	73	41,8	26,7		73	41,8	26,7			41,8	26,7			
		2,0-3,3		3,6	160	160	104,1	160	104,1	60,3	104,1	60,3	38,9		104,1	60,3	38,9			60,3	38,9			
Actuator DP33		1,5-3,0 (1,7-2,7)		3,3 (3,1)	(160)	(160)	(148,2)	(160)	(148,2)	(86,4)	(148,2)	(86,4)	(56,1)	30,2	(148,2)	(86,4)	(56,1)	30,2	18,7	(86,4)	(56,1)	30,2	18,7	10,6
		2,0-4,0 (2,3-3,7)		4,5 (4)	(160)	(160)	(160)	(160)	(160)	(121,6)	(160)	(121,6)	(79,4)	42,6	(160)	(121,6)	(79,4)	42,6	26,7	(121,6)	(79,4)	42,6	26,7	15,3

DN					80					100					125				
Kvs-value		Seat-Ø (mm)			32	40	50	65	80	40	50	65	80	100	50	65	80	100	125
		Parabolic plug			16	25	40	63	100	25	40	63	100	160	40	63	100	160	200
		Perforated plug			--	16	25	40	63	--	25	40	63	100	--	40	63	100	160
		Travel (mm)			20	30	30	30	40	30	30	30	40	40	30	30	40	40	40
Max. differential pressure drop (bar)		Parabolic plug			30	30	30	15	30	30	30	15	30	30	30	30	30	30	30
		Perforated plug			40	40	40	40	40	40	40	40	40	40	40	40	40	40	40
Actuator DP32	Spring range (bar)	1,5-2,5	Air supply pressure min. (bar)	2,8	26,7														
		2,0-3,3		3,6	38,9														
Actuator DP33		1,5-3,0 (1,7-2,7)		3,3 (3,1)	(56,1)	30,2	18,7	10,6		30,2	18,7	10,6			18,7	10,6			
		2,0-4,0 (2,3-3,7)		4,5 (4)	(79,4)	42,6	26,7	15,3		42,6	26,7	15,3			26,7	15,3			
Actuator DP34		1,5-2,7		3,1					15,8a)				15,8a)	9,8a)			15,8a)	9,8a)	6a)
		2,0-3,6		4					22				22	13,8			22	13,8	8,6

Air supply pressure max. of pneumatic actuators DP: max. permissible 6 bar
Air supply pressure max. limit of control valve: max. permissible a) 5 bar b) 4,5 bar c) 4 bar d) 3,5 bar e) 3 bar

Closing pressures **for Fig. 472 pressure balanced plug refer to page 22.**

max. permissible closing pressures on flow-to-open P2 = 0.
Observe restrictions by Pressure-temperature-ratings, refer to page 23.

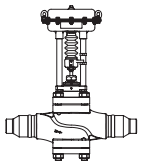

Fig. 472 with butt weld ends: Spring opens on air failure

DN			15			25			40				50					65				
Kvs-value	Seat-Ø (mm)		6	12	20	12	20	26	20	26	32	40	20	26	32	40	50	26	32	40	50	65
	Parabolic plug		0,4	1,6 / 1,0 / 0,63	2,5 / 4	1,6 / 1,0 / 0,63	6,3 / 4,0 / 2,5	10	6,3 / 4,0 / 2,5	10	16	25	6,3	10	16	25	40	10	16	25	40	63
	Perforated plug		--	--	2,5	--	2,5 / 4	6,3	4	6,3	10	16	--	6,3	10	16	25	--	10	16	25	40
	Travel (mm)		20	20	20	20	20	20	20	20	20	30	20	20	20	30	30	20	20	30	30	30
Max. differential pressure drop (bar)	Parabolic plug		30	30	30	30	30	30	30	30	30	30	30	30	30	30	30	30	30	30	30	15
	Perforated plug		--	--	40	--	40	40	40	40	40	40	--	40	40	40	40	--	40	40	40	40
Actuator DP32	Air supply pressure min. (bar)	2	160	155,4	52,2	155,4	52,2	29,2	52,2	29,2	18,2	10,7	52,2	29,2	18,2	10,7	6,1	29,2	18,2	10,7	6,1	2,9
		3		160	130,2	160	130,2	75,4	130,2	75,4	48,7	30,2	130,2	75,4	48,7	30,2	18,6	75,4	48,7	30,2	18,6	10,3
		4			160		160	121,5	160	121,5	79,1	49,7	160	121,5	79,1	49,7	31,1	121,5	79,1	49,7	31,1	17,7
		5						160		160	109,6	69,2		160	109,6	69,2	43,5	160	109,6	69,2	43,5	25,1
		6									140,1	88,7			140,1	88,7	56		140,1	88,7	56	32,5
Actuator DP33		2	160	160	98,4	160	98,4	56,5	98,4	56,5	36,2	22,2	98,4	56,5	36,2	22,2	13,5	56,5	36,2	22,2	13,5	7,3
		3			160		160	130	160	130	84,7	53,3	160	130	84,7	53,3	33,4	130	84,7	53,3	33,4	19,1
		4						160		160	133,2	84,3		160	133,2	84,3	53,2	160	133,2	84,3	53,2	30,8

DN			80					100					125				
Kvs-value	Seat-Ø (mm)		32	40	50	65	80	40	50	65	80	100	50	65	80	100	125
	Parabolic plug		16	25	40	63	100	25	40	63	100	160	40	63	100	160	200
	Perforated plug		--	16	25	40	63	--	25	40	63	100	--	40	63	100	160
	Travel (mm)		20	30	30	30	40	30	30	30	40	40	30	30	40	40	40
Max. differential pressure drop (bar)	Parabolic plug		30	30	30	15	30	30	30	15	30	30	30	30	30	30	30
	Perforated plug		40	40	40	40	40	40	40	40	40	40	40	40	40	40	40
Actuator DP32	Air supply pressure min. (bar)	2	18,2	10,7	6,1	2,9											
		3	48,7	30,2	18,6	10,3											
		4	79,1	49,7	31,1	17,7											
		5	109,6	69,2	43,5	25,1											
		6	140,1	88,7	56	32,5											
Actuator DP33		2	36,2	22,2	13,5	7,3		22,2	13,5	7,3			13,5	7,3			
		3	84,7	53,3	33,4	19,1		53,3	33,4	19,1			33,4	19,1			
		4	133,2	84,3	53,2	30,8		84,3	53,2	30,8			53,2	30,8			
Actuator DP34		2					14,4				14,4	8,8			14,4	8,8	5,4
		3					30				30	18,8			30	18,8	11,8
		4					45,6				45,6	28,8			45,6	28,8	18,2

Air supply pressure max. of pneumatic actuators DP:	max. permissible	6 bar
Air supply pressure max. limit of control valve:	max. permissible	a) 5 bar b) 4,5 bar c) 4 bar d) 3,5 bar e) 3 bar

Closing pressures **for Fig. 472 pressure balanced plug refer to page 22.**

max. permissible closing pressures on flow-to-open P2 = 0.
Observe restrictions by Pressure-temperature-ratings, refer to page 23.

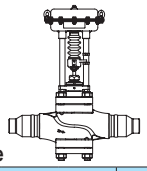

Fig. 472 with butt weld ends Pressure balanced plug Spring closes on air failure

DN					25		40				50					65				
Kvs-value		Seat-Ø (mm)			20	26	20	26	32	40	20	26	32	40	50	26	32	40	50	65
		Parabolic plug			6,3 / 4,0 / 2,5	10	6,3 / 4,0 / 2,5	10	16	25	6,3	10	16	25	40	10	16	25	40	63
		Perforated plug			2,5 / 4	6,3	4	6,3	10	16	--	6,3	10	16	25	--	10	16	25	40
		Travel (mm)			20	20	20	20	20	30	20	20	20	30	30	20	20	30	30	30
Max. differential pressure drop (bar)		Parabolic plug			30	30	30	30	30	30	30	30	30	30	30	30	30	30	30	15
		Perforated plug			40	40	40	40	40	40	40	40	40	40	40	40	40	40	40	40
Actuator **DP32**	Spring range (bar)	1,5-2,5	Air supply pressure min. (bar)	2,8	160	160	160	160	160	--	160	160	160	--	--	160	160	--	--	--
Actuator **DP33**		1,5-3,0		3,3	--	--	--	--	--	160	--	--	--	160	160	--	--	160	160	160

DN					80					100					125				
Kvs-value		Seat-Ø (mm)			32	40	50	65	80	40	50	65	80	100	50	65	80	100	125
		Parabolic plug			16	25	40	63	100	25	40	63	100	160	40	63	100	160	200
		Perforated plug			--	16	25	40	63	--	25	40	63	100	--	40	63	100	160
		Travel (mm)			20	30	30	30	40	30	30	30	40	40	30	30	40	40	40
Max. differential pressure drop (bar)		Parabolic plug			30	30	30	15	30	30	30	15	30	30	30	15	30	30	30
		Perforated plug			40	40	40	40	40	40	40	40	40	40	40	40	40	40	40
Actuator **DP32**	Spring range (bar)	1,5-2,5	Air supply pressure min. (bar)	2,8	160	--	--	--	--	--	--	--	--	--	--	--	--	--	--
Actuator **DP33**		1,5-3,0		3,3	--	160	160	160	--	160	160	160	--	--	160	160	--	--	--
Actuator **DP34**		1,5-2,7		3,1	--	--	--	--	160a)	--	--	--	160a)	160a)	--	--	160a)	160a)	160a)

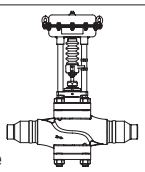

Fig. 472 with butt weld ends Pressure balanced plug Spring opens on air failure

DN				40				50					65				
Kvs-value		Seat-Ø (mm)		20	26	32	40	20	26	32	40	50	26	32	40	50	65
		Parabolic plug		6,3 / 4,0 / 2,5	10	16	25	6,3	10	16	25	40	10	16	25	40	63
		Perforated plug		4	6,3	10	16	--	6,3	10	16	25	--	10	16	25	40
		Travel (mm)		20	20	20	30	20	20	20	30	30	20	20	30	30	30
Max. differential pressure drop (bar)		Parabolic plug		30	30	30	30	30	30	30	30	30	30	30	30	30	15
		Perforated plug		40	40	40	40	40	40	40	40	40	40	40	40	40	40
Actuator **DP32**	Air supply pressure min. (bar)		3	160	160	160	160	160	160	160	160	160	160	160	160	160	160

DN				80					100					125				
Kvs-value		Seat-Ø (mm)		32	40	50	65	80	40	50	65	80	100	50	65	80	100	125
		Parabolic plug		16	25	40	63	100	25	40	63	100	160	40	63	100	160	200
		Perforated plug		--	16	25	40	63	--	25	40	63	100	--	40	63	100	160
		Travel (mm)		20	30	30	30	40	30	30	30	40	40	30	30	40	40	40
Max. differential pressure drop (bar)		Parabolic plug		30	30	30	15	30	30	30	15	30	30	30	15	30	30	30
		Perforated plug		40	40	40	40	40	40	40	40	40	40	40	40	40	40	40
Actuator. **DP33**	Air supply pressure min. (bar)		3	160c)	160c)	160c)	160c)	--	160c)	160c)	160c)	--	--	160c)	160c)	--	--	--
Actuator. **DP34**			2	--	--	--	--	160c)	--	--	--	160c)	160c)	--	--	160c)	160c)	160c)

Air supply pressure max. of pneumatic actuators DP: max. permissible 6 bar
Air supply pressure max. limit of control valve: max. permissible a) 5 bar b) 4,5 bar c) 4 bar d) 3,5 bar e) 3 bar

Standard-flange dimensions

Flanges acc. to DIN 2636, 2637, 2638

DN			15	25	40	50	65	80	100	125
PN63	ØD	(mm)	105	140	170	180	205	215	250	295
PN63	ØK	(mm)	75	100	125	135	160	170	200	240
PN63	n x Ød	(mm)	4x14	4x18	4x22	4x22	8x22	8x22	8x26	8x30
PN100	ØD	(mm)	105	140	170	195	220	230	265	315
PN100	ØK	(mm)	75	100	125	145	170	180	210	250
PN100	n x Ød	(mm)	4x14	4x18	4x22	4x26	8x26	8x26	8x30	8x33
PN160	ØD	(mm)	105	140	170	195	220	230	265	315
PN160	ØK	(mm)	75	100	125	145	170	180	210	250
PN160	n x Ød	(mm)	4x14	4x18	4x22	4x26	8x26	8x26	8x30	8x33

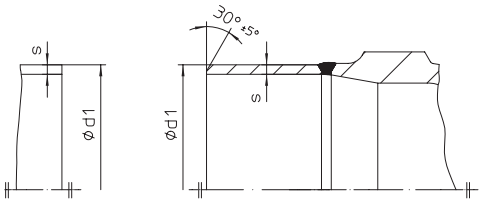

Standard-shoed butt weld ends

DN			15	25	40	50	65	80	100	125
Ød1		(mm)	21,3	33,7	48,3	60,3	76,1	88,9	114,3	139,7
s	PN63	(mm)	2	2,6	2,9	2,9	3,2	3,6	4	4,5
s	PN100	(mm)	2	2,6	2,9	3,2	3,6	4	5	6,3
s	PN160	(mm)	2	2,9	3,6	4	5	6,3	8	10

Pressure-temperature-ratings acc. to manufacturers standard

Material			-10°C to 50°C	100°C	200°C	250°C	300°C	350°C	400°C
1.0619+N	PN63	(bar)	63	55,1	45,9	42	38,1	35,4	34,1
1.0619+N	PN100	(bar)	100	87,5	72,9	66,7	60,4	56,3	54,2
1.0619+N	PN160	(bar)	160	140	116,7	106,7	96,7	90	86,7

Material			-10°C to 400°C	450°C	500°C	520°C	530°C	540°C	550°C
1.7379	PN63	(bar)	63	57,2	35,7	28,4	24,7	21	17,3
1.7379	PN100	(bar)	100	90,8	56,7	45	39,2	33,3	27,5
1.7379	PN160	(bar)	160	145,3	90,7	72	62,7	53,3	44

Intermediate values for max. permissible operational pressures can be determined by linear interpolation of the given temperature / pressure chart.

Please indicate when ordering:

- Figure-No.
- Nominal diameter
- Nominal pressure
- Body material
- Plug design
- Kvs-value
- Flow characteristic
- Actuator
- Special design / accessories

At shoed butt weld ends, please indicate pipe material, pipe diameter, pipewall thickness and bevel form

Example:

Figure 36.472, Nominal diameter DN100, Nominal pressure PN63, Body material 1.0619+N, Parabolic plug, Kvs 160, Equal percentage, ARI-PREMIO 5kN.

Dimensions in mm
Weights in kg
Pressures in barg (gauge)
1 bar ≙ 10^5 Pa ≙ 0,1 MPa
Kvs in m^3/h

Stem sealing

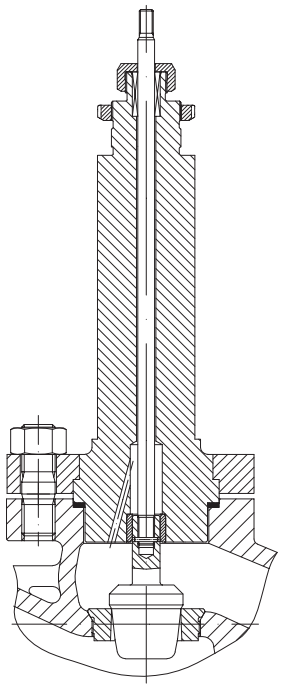

Extended bonnet
at media temperatures >300°C (with ARI-PREMIO and ARI-DP), resp. >400°C (with AUMA SAR)

Plug design

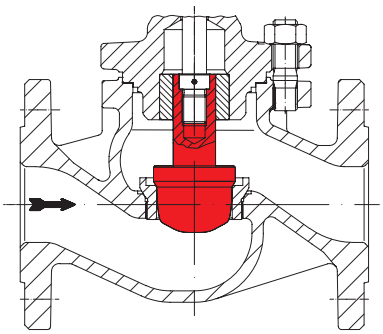

Parabolic plug with post guiding

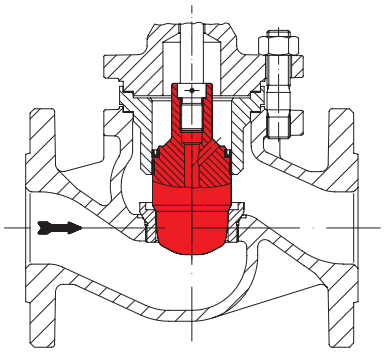

Parabolic pressure balanced plug

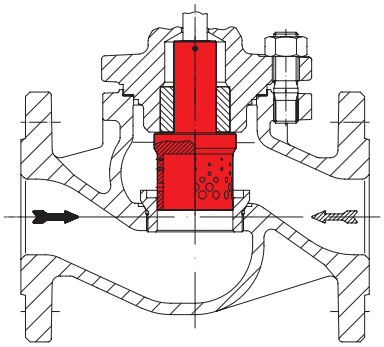

Perforated plug with post and port guiding

Flow direction for gas and steam to reduce the sound level

Flow direction for liquids to reduce the cavitation

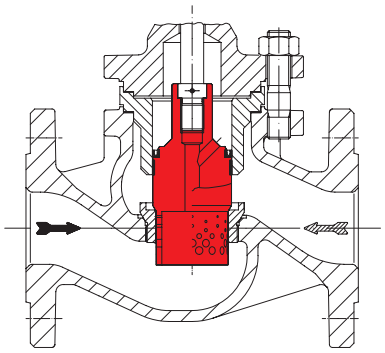

Perforated pressure balanced plug

Flow direction for gas and steam to reduce the sound level

Flow direction for liquids to reduce the cavitation

Technology for the Future.
GERMAN QUALITY VALVES
ARI-Armaturen Albert Richter GmbH & Co. KG, D-33756 Schloß Holte-Stukenbrock,
Tel. +49 52 07 / 994-0, Telefax +49 52 07 / 994-158 or 159 Internet: http://www.ari-armaturen.com E-mail: info.vertrieb@ari-armaturen.com