Stop valve - straight through with flanges
DN 15 - 250

ARI-STEVI® 405 / 460
Electric actuator ARI-PREMIO

- Enclosure IP 65
- 2 torque switches
- Handwheel
- Additional devices available, e.g. potentiometer

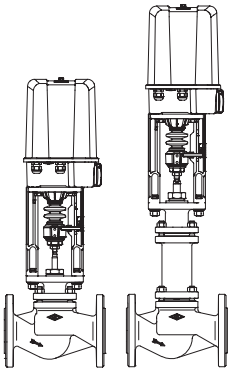

Page 2

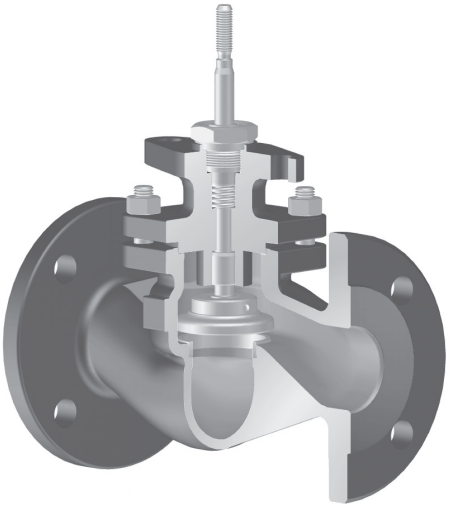

Fig. 405

ARI-STEVI® 405 / 460
Electric actuator AUMA SA

- Electric multiturn actuator capable of high closing pressures
- Enclosure IP 67
- 2 torque switches
- 2 travel switches
- Handwheel
- Overheating protection for motor as standard
- Additional devices available, e.g. potentiometer
- Explosion proof version available

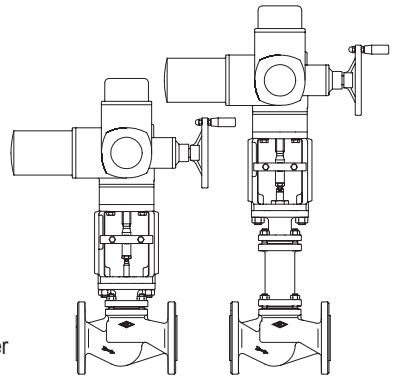

Page 10

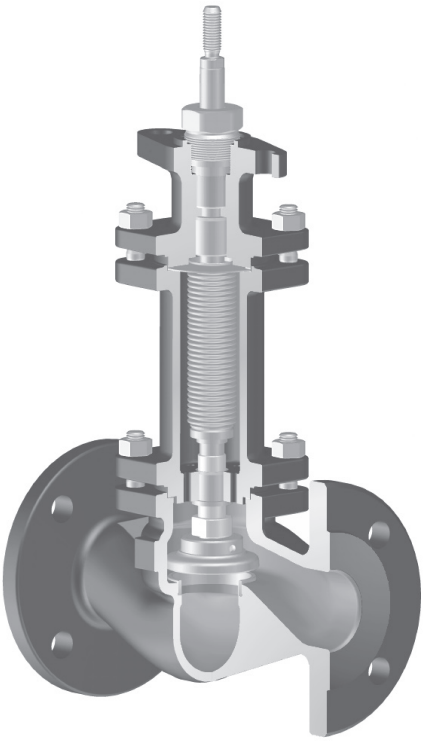

Fig. 460

ARI-STEVI® 405 / 460
Pneumatic actuator ARI-DP

- Reversible pneumatic actuator
- Actuator with rolling diaphragm
- Air supply pressure max. 6 bar
- Stem protection by bellow
- Maintenance-free O-ring sealing
- Assembly of additional devices acc. to DIN IEC 60534-6

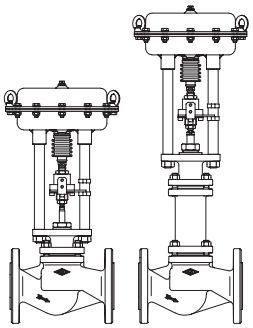

Page 18

Features:

- Compact design
- Precision guided stem
- Burnished stem
- Spring loaded PTFE-V ring packing unit
- Double wall bellows seal as standard
- Travel indicator

Stop valve in straightway form with electric actuator ARI-PREMIO (DN 15-150)

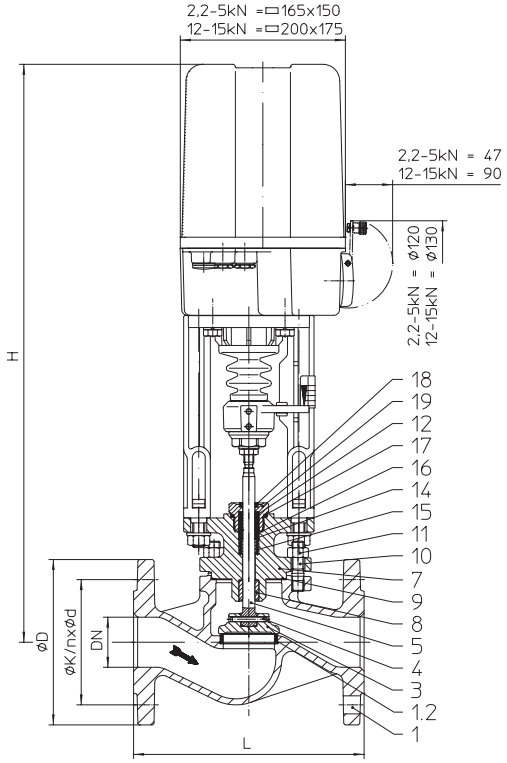

Fig. 405

Figure	Nominal pressure	Material	Nominal diameter
12.405 / 12.460	PN16	EN-JL1040	DN15-150
22.405 / 22.460	PN16	EN-JS1049	DN15-150
23.405 / 23.460	PN25	EN-JS1049	DN15-150
34.405 / 34.460	PN25	1.0619+N	DN15-150
35.405 / 35.460	PN40	1.0619+N	DN15-150
55.405 / 55.460	PN40	1.4408	DN15-150
Other materials and versions on request.			

Stem sealing

Fig. 405:
- PTFE-V-ring unit -10°C up to +220°C
- PTFE-packing -10°C up to +250°C
- Pure graphite-packing -10°C up to +450°C

Fig. 460:
- Stainless steel bellows seal with safety stuffing box -60°C up to +450°C

Plug design

standard:
- Isolation plug

optional:
- Isolation plug with PTFE soft seat (max. 200°C)

Shut off class (seat / plug leakage classes)

- Metal seat - Leakage class 1 acc. to DIN 3230 T3 / B0
- Metal seat / PTFE - Leakage class 1 acc. to DIN 3230 T3 / B0

Closing pressures refer to page 4.

Technical data for actuator refer to data sheet..

Selection of possible applications

Industrial installations, processing technology, plant manufacturing, etc.
(other applications on request)

Selection of possible flow media

Fig. 405: Cooling water, cooling brine, warm water, hot water, steam, gas, etc.

Fig. 460: Refrigerant, Cooling water, warm water, hot water, thermal oil, steam, gas, etc.

(other flow media on request)

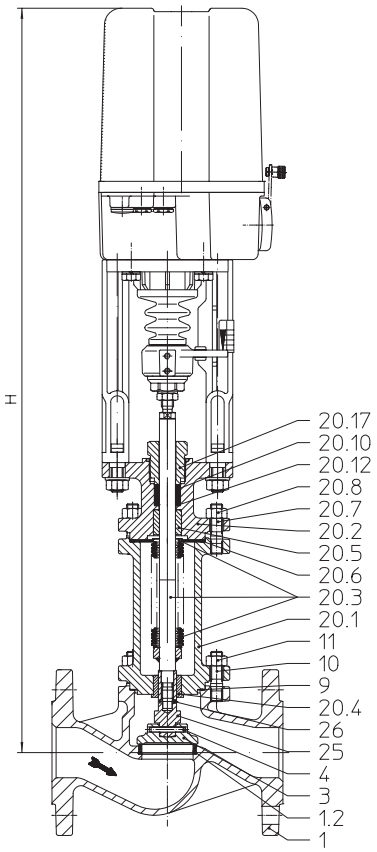

Fig. 460

Dimensions and weights

DN				15	20	25	32	40	50	65	80	100	125	150
L			(mm)	130	150	160	180	200	230	290	310	350	400	480
Fig. 405	H		(mm)	556	556	564	565	571	577	590	606	625	685	--
	ARI-PREMIO 2,2 kN	PN16	(kg)	9	9,7	10,6	12,2	14,1	17	22,1	--	--	--	--
		PN25/40	(kg)	9,8	10,6	11,9	13,7	16,2	18,9	26,1	--	--	--	--
	ARI-PREMIO 5 kN	PN16	(kg)	10,1	10,8	11,7	13,3	15,2	18,1	23,2	28,9	39	62	--
		PN25/40	(kg)	10,9	11,7	13	14,8	17,3	20	27,2	33,4	46	74	--
	H		(mm)	--	--	--	--	721	727	740	756	775	833	893
	ARI-PREMIO 12 kN	PN16	(kg)	--	--	--	--	19,2	22,1	27,2	32,9	43	66	87
	ARI-PREMIO 15 kN	PN25/40	(kg)	--	--	--	--	21,3	24	31,2	37,4	50	78	109
Fig. 460	H		(mm)	741	741	749	749	740	742	826	838	854	913	--
	ARI-PREMIO 2,2 kN	PN16	(kg)	13,4	13,4	14,4	16,9	19,4	21,9	24,9	--	--	--	--
		PN25/40	(kg)	15,4	16,9	19,4	22,4	28,4	30,9	37,9	--	--	--	--
	ARI-PREMIO 5 kN	PN16	(kg)	14,5	14,5	15,5	18	20,5	23	26	37	53	69	--
		PN25/40	(kg)	16,5	18	20,5	23,5	29,5	32	39	49	66	81	--
	H		(mm)	--	--	--	--	890	892	976	988	1004	1061	1219
	ARI-PREMIO 12 kN	PN16	(kg)	--	--	--	--	24,5	27	30	41	57	73	104
	ARI-PREMIO 15 kN	PN25/40	(kg)	--	--	--	--	33,5	36	43	53	70	85	129
Standard-flange dimensions refer to page 27.														

Face-to-face dimension FTF series 1 according to DIN EN 558

Parts

Pos.	Description	Fig. 12.405 Fig. 12.460	Fig. 22.405 / Fig. 23.405 Fig. 22.460 / Fig. 23.460	Fig. 34.405 / Fig. 35.405 Fig. 34.460 / Fig. 35.460	Fig. 55.405 Fig. 55.460
1	Body	EN-GJL-250 , EN-JL1040	EN-GJS-400-18U-LT, EN-JS1049	GP240GH+N, 1.0619+N	GX5CrNiMo19-11-2, 1.4408
1.2	Seat ring	X20Cr13+QT, 1.4021+QT		X20Cr13+QT, 1.4021+QT >DN50: G19 9 Nb Si, 1.4551	--
3	Plug *	X20Cr13+QT, 1.4021+QT			X6CrNiMoTi17-12-2, 1.4571
4	Straight spin *	46S20+C, 1.0727+C			
5	Stem *	X20Cr13+QT, 1.4021+QT			X6CrNiMoTi17-12-2, 1.4571
7	Mounting bonnet	EN-GJS-400-18U-LT, EN-JS1049		GP240GH+N, 1.0619+N	GX5CrNiMo19-11-2, 1.4408
8	Guide bushing	X20Cr13+QT, 1.4021+QT (hardened)			X6CrNiMoTi17-12-2, 1.4571
9	Gasket *	Pure graphite (CrNi laminated with graphite)			
10	Studs	25CrMo4, 1.7218			A4 - 70
11	Hexagon nuts	C35E, 1.1181			A4
12	V-ring unit *	PTFE			
14	Washer *	X5CrNi18-10, 1.4301			
15	Spring *	X12CrNi17-7, 1.4310			
16	Bushing *	PTFE (reinforced)			
17	Sealing ring *	Cu / Soft iron			X6CrNiMoTi17-12-2, 1.4571
18	Scraper *	PTFE (reinforced)			
19	Screw joint *	X8CrNiS18-9, 1.4305			
20.1	Bellows housing	EN-GJS-400-18U-LT, EN-JS1049		GP240GH+N, 1.0619+N	GX5CrNiMo19-11-2, 1.4408
20.2	Mounting bonnet	EN-GJS-400-18U-LT, EN-JS1049		GP240GH+N, 1.0619+N	GX5CrNiMo19-11-2, 1.4408
20.3	Stem- / Bellows unit *	X20Cr13+QT, 1.4021+QT / X6CrNiTi18-10, 1.4541			X6CrNiMoTi17-12-2, 1.4571
20.4	Guide bushing	X20Cr13+QT, 1.4021+QT (hardened)			X6CrNiMoTi17-12-2, 1.4571
20.5	Guide bushing	X20Cr13+QT, 1.4021+QT (hardened)			X6CrNiMoTi17-12-2, 1.4571
20.6	Gasket *	Pure graphite (CrNi laminated with graphite)			
20.7	Studs	25CrMo4, 1.7218			A4 - 70
20.8	Hexagon nuts	C35E, 1.1181			A4
20.9	Straight pin (DN125-150)	St			
20.10	Packing ring *	Pure graphite			
20.12	Washer *	X5CrNi18-10, 1.4301			
20.17	Screw joint *	X8CrNiS18-9, 1.4305			
25	Stem adapter *	X20Cr13+QT, 1.4021+QT			X6CrNiMoTi17-12-2, 1.4571
26	Straight spin *	X12CrNi17-7, 1.4310			
* Spare parts					

Information / restriction of technical rules need to be observed!

ARI-Valves of EN-JL1040 are not allowed to be operated in systems acc. to TRD 110.

A production allowance acc. to TRB 801 No. 45 exists (acc. to TRB 801 No. 45 EN-JL1040 is not allowed.)

The engineer, designing a system or a plant, is responsible for the selection of the correct valve.

max. permissible closing pressures on flow-to-open P2 = 0
Observe restrictions by Pressure-temperature-ratings, refer to page 27.

DN			15	20	25	32	40	50	65	80	100	125	150
Kvs-value			4,2	7,4	12	19	31	47	77	120	188	288	410
Travel (mm)			4	5	7	8	10	13	17	20	25	32	38
Max. differential pressure drop (bar)			2	2	2	2	2	2	2	2	1,5	1,5	1
Actuator [1] **ARI-PREMIO 2,2 kN**	Closing pressure (bar)	**I.**	36,2	36,2	21,6	14,8	7,1	3,5	1,1				
		II.	33,3	33,3	19,7	13,4	6,2	3					
		III.	23,6	23,6	18,1	12,2	5	2,2					
	Operating time [2] (s) (Op. Speed 0,38 mm/s)		11	13	18	21	26	34	45				
Actuator [1] **ARI-PREMIO 5 kN**	Closing pressure (bar)	**I.**	40	40	40	40	26,2	15,9	8,6	5,1	2,8	1,3	
		II.	40	40	40	40	25,4	15,4	8,2	4,8	2,6	1,2	
		III.	40	40	40	40	24,2	14,6	7,9	4,6	2,5	1,1	
	Operating time [2] (s) (Op. Speed 0,38 mm/s)		11	13	18	21	26	34	45	53	66	84	
	Operating time [2] (s) (Op. Speed 1 mm/s)		4	5	7	8	10	13	17	20	25	32	
Actuator [1] **ARI-PREMIO 12 kN**	Closing pressure (bar)	**I.**					40	40	27,5	17,7	11	6,6	4,3
		II.					40	40	27,1	17,4	10,8	6,5	4,2
		III.					40	40	26,8	17,2	10,7	6,4	4,1
	Operating time [2] (s) (Op. Speed 0,38 mm/s)						26	34	45	53	66	84	100
Actuator [1] **ARI-PREMIO 15 kN**	Closing pressure (bar)	**I.**							35,6	23,1	14,5	8,9	5,9
		II.							35,2	22,8	14,3	8,7	5,8
		III.							34,9	22,6	14,2	8,7	5,7
	Operating time [2] (s) (Op. Speed 0,38 mm/s)								45	53	66	84	100

I. Fig. 405: PTFE-V-ring unit; II. Fig. 405: PTFE- / pure graphite-packing; III. Fig. 460: Bellows seal

[1] Motor voltage: 230V 50Hz
Other voltages: 24V 50/60Hz; 115V 50/60Hz; 230V 60Hz
Technical data for actuator refer to data sheet ARI-PREMIO.

[2] Indicated operating times with 50Hz.

Stop valve in straightway form with electric actuator ARI-PREMIO (DN 200-250)

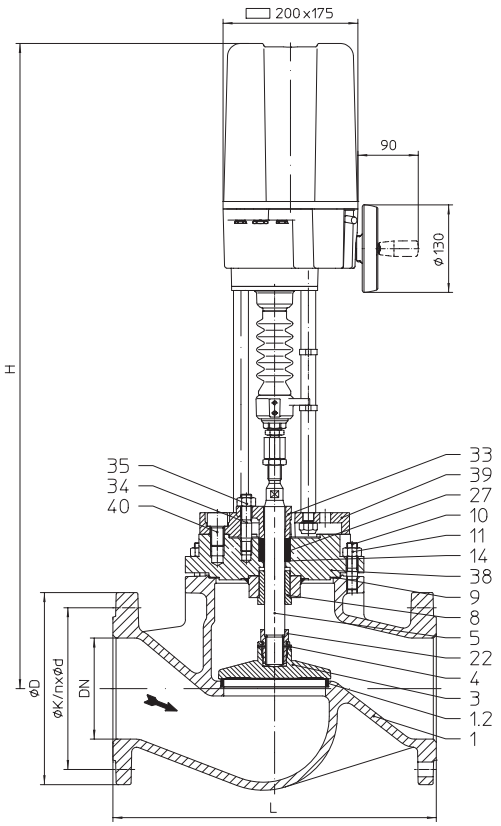

Fig. 405

Figure	Nominal pressure	Material	Nominal diameter
12.405 / 12.460	PN16	EN-JL1040	DN200-250
22.405 / 22.460	PN16	EN-JS1049	DN200-250
34.405 / 34.460	PN25	1.0619+N	DN200-250
35.405 / 35.460	PN40	1.0619+N	DN200-250
Other materials and versions on request.			

Stem sealing

Fig. 405: • PTFE-packing -10°C up to +250°C
• Pure graphite-packing -10°C up to +450°C

Fig. 460: • Stainless steel bellows seal with safety stuffing box -60°C up to +450°C

Plug design

standard: • Isolation plug

optional: • Isolation plug with PTFE soft seat (max. 200°C)

Shut off class seat / plug leakage classes

• Metal seat - Leakage class 1 acc. to DIN 3230 T3 / B0
• Metal seat / PTFE - Leakage class 1 acc. to DIN 3230 T3 / B0

Closing pressures refer to page 8.

Technical data for actuator refer to data sheet..

Selection of possible applications

Industrial installations, processing technology, plant manufacturing, etc.
(other applications on request)

Selection of possible flow media

Fig. 405: Cooling water, cooling brine, warm water, hot water, steam, gas, etc.

Fig. 460: Refrigerant, Cooling water, warm water, hot water, thermal oil, steam, gas, etc.

(other flow media on request)

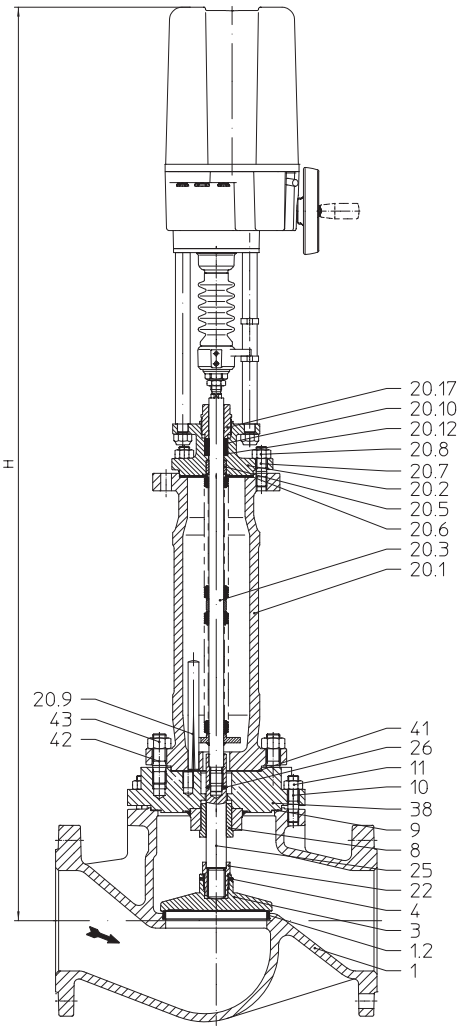

Fig. 460

Dimensions and weights

DN				200	250
L			(mm)	600	730
Fig. 405	H		(mm)	982	1072
	ARI-PREMIO 12 kN	PN16	(kg)	142	214
	ARI-PREMIO 15 kN	PN25/40	(kg)	173	250
Fig. 460	H		(mm)	1418	1494
	ARI-PREMIO 12 kN	PN16	(kg)	150	230
	ARI-PREMIO 15 kN	PN25/40	(kg)	180	265
Standard-flange dimensions refer to page 27.					

Face-to-face dimension FTF series 1 according to DIN EN 558

Parts

Pos.	Description	Fig. 12.405 Fig. 12.460	Fig. 22.405 Fig. 22.460	Fig. 34.405 / Fig. 35.405 Fig. 34.460 / Fig. 35.460
1	Body	EN-GJL-250 , EN-JL1040	EN-GJS-400-18U-LT, EN-JS1049	GP240GH+N, 1.0619+N
1.2	Seat ring	X20Cr13+QT, 1.4021+QT		X20Cr13+QT, 1.4021+QT >DN50: G19 9 Nb Si, 1.4551
3	Plug *	X20Cr13+QT, 1.4021+QT		
4	Straight spin *	46S20+C, 1.0727+C		
5	Stem *	X20Cr13+QT, 1.4021+QT		
8	Guide bushing	X20Cr13+QT, 1.4021+QT (hardened)		
9	Gasket *	Pure graphite (CrNi laminated with graphite)		
10	Studs	25CrMo4, 1.7218		
11	Hexagon nuts	C35E, 1.1181		
14	Washer *	X5CrNi18-10, 1.4301		
20.1	Bellows housing	EN-GJS-400-18U-LT, EN-JS1049		GP240GH+N, 1.0619+N
20.2	Mounting bonnet	EN-GJS-400-18U-LT, EN-JS1049		GP240GH+N, 1.0619+N
20.3	Stem- / Bellows unit *	X20Cr13+QT, 1.4021+QT / X6CrNiTi18-10, 1.4541		
20.5	Guide bushing	X20Cr13+QT, 1.4021+QT (hardened)		
20.6	Gasket *	Pure graphite (CrNi laminated with graphite)		
20.7	Studs	25CrMo4, 1.7218		
20.8	Hexagon nuts	C35E, 1.1181		
20.9	Straight pin	St		
20.10	Packing ring *	Pure graphite		
20.12	Washer *	X5CrNi18-10, 1.4301		
20.17	Screw joint *	X8CrNiS18-9, 1.4305		
22	Screw joint *	X14CrMoS17+QT, 1.4104+QT		
25	Stem adapter *	X20Cr13+QT, 1.4021+QT		
26	Straight spin *	X12CrNi17-7, 1.4310		
27	Packing ring *	PTFE or Pure graphite		
33	Packing box flange	EN-GJS-400-15, EN-JS1030		
34	Studs	25CrMo4, 1.7218		
35	Hexagon nut	C35E, 1.1181		
38	Stuffing box housing	EN-GJS-400-18U-LT, EN-JS1049		GP240GH+N, 1.0619+N
39	Adapter flange	EN-GJS-400-18U-LT, EN-JS1049		
40	Hexagon socket head screw	8.8 - A2B		
41	Gasket *	Pure graphite		
42	Studs	25CrMo4, 1.7218		
43	Hexagon nut	C35E, 1.1181		
* Spare parts				

Information / restriction of technical rules need to be observed!

ARI-Valves of EN-JL1040 are not allowed to be operated in systems acc. to TRD 110.

A production allowance acc. to TRB 801 No. 45 exists (acc. to TRB 801 No. 45 EN-JL1040 is not allowed.)

The engineer, designing a system or a plant, is responsible for the selection of the correct valve.

max. permissible closing pressures on flow-to-open P2 = 0
Observe restrictions by Pressure-temperature-ratings, refer to page 27.

DN			200	250
Kvs-value			725	1145
Travel (mm)			50	65
Max. differential pressure drop (bar)			0,8	0,8
Actuator [1] **ARI-PREMIO 12 kN**	Closing pressure (bar)	**II.**	2	1,1
		III.	2	1,1
	Operating time [2] (s) (Op. Speed 0,38 mm/s)		132	171
	Operating time [2] (s) (Op. Speed 0,79 mm/s)		63	82
Actuator [1] **ARI-PREMIO 15 kN**	Closing pressure (bar)	**II.**	2,9	1,7
		III.	2,9	1,7
	Operating time [2] (s) (Op. Speed 0,38 mm/s)		132	171
II. Fig. 405: PTFE- / pure graphite-packing;			**III. Fig. 460: Bellows seal**	

[1] Motor voltage: 230V 50Hz
Other voltages: 24V 50/60Hz; 115V 50/60Hz; 230V 60Hz
Technical data for actuator refer to data sheet ARI-PREMIO.

[2] Indicated operating times with 50Hz.

Stop valve in straightway form with electric actuator AUMA SA (DN 15-150)

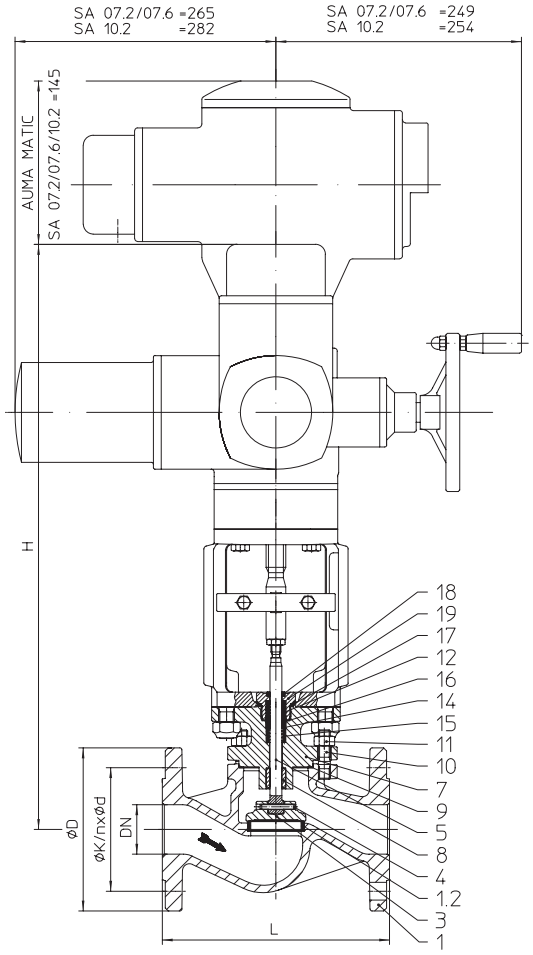

Fig. 405

Figure	Nominal pressure	Material	Nominal diameter
12.405 / 12.460	PN16	EN-JL1040	DN15-150
22.405 / 22.460	PN16	EN-JS1049	DN15-150
23.405 / 23.460	PN25	EN-JS1049	DN15-150
34.405 / 34.460	PN25	1.0619+N	DN15-150
35.405 / 35.460	PN40	1.0619+N	DN15-150
55.405 / 55.460	PN40	1.4408	DN15-150
Other materials and versions on request.			

Stem sealing

Fig. 405:
- PTFE-V-ring unit -10°C up to +220°C
- PTFE-packing -10°C up to +250°C
- Pure graphite-packing -10°C up to +450°C

Fig. 460:
- Stainless steel bellows seal with safety stuffing box -60°C up to +450°C

Plug design

standard:
- Isolation plug

optional:
- Isolation plug with PTFE soft seat (max. 200°C)

Shut off class (seat / plug leakage classes)

- Metal seat - Leakage class 1 acc. to DIN 3230 T3 / B0
- Metal seat / PTFE - Leakage class 1 acc. to DIN 3230 T3 / B0

Closing pressures refer to page 12.

Technical data for actuator refer to data sheet..

Selection of possible applications

Industrial installations, processing technology, plant manufacturing, etc.
(other applications on request)

Selection of possible flow media

Fig. 405: Cooling water, cooling brine, warm water, hot water, steam, gas, etc.

Fig. 460: Refrigerant, Cooling water, warm water, hot water, thermal oil, steam, gas, etc.

(other flow media on request)

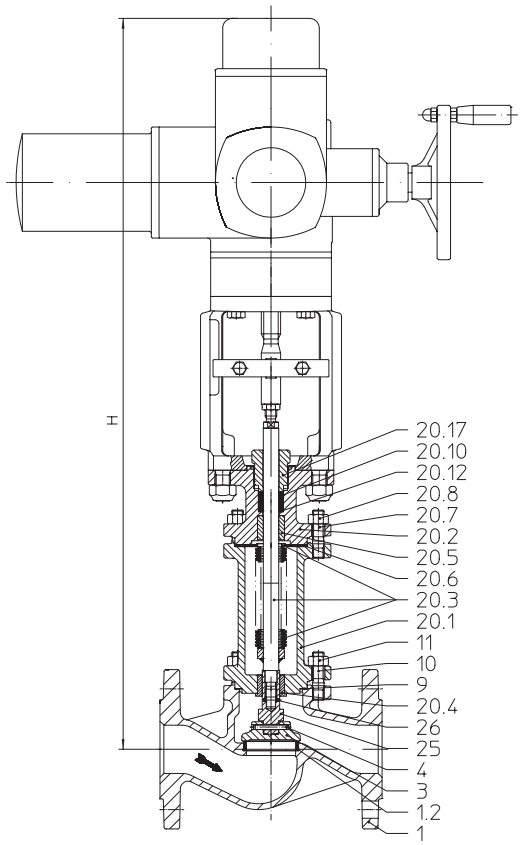

Fig. 460

Dimensions and weights

DN				15	20	25	32	40	50	65	80	100	125	150
L			(mm)	130	150	160	180	200	230	290	310	350	400	480
Fig. 405	H		(mm)	596	596	604	605	611	617	630	646	665	703	763
	AUMA SA 07.2 AUMA SA 07.6	PN16	(kg)	29,9	30,6	31,5	33,1	35	37,9	44,5	50,2	60	83	104
		PN25/40	(kg)	30,7	31,5	32,8	34,6	37,1	39,8	48,5	54,7	68	95	126
	H		(mm)	--	--	--	--	--	--	--	658	677	715	775
	AUMA SA 10.2	PN16	(kg)	--	--	--	--	--	--	--	54,7	65	87	108
		PN25/40	(kg)	--	--	--	--	--	--	--	59,2	72	99	130
Fig. 460	H		(mm)	781	781	789	789	780	782	866	878	894	931	1089
	AUMA SA 07.2 AUMA SA 07.6	PN16	(kg)	34,3	34,3	35,3	37,8	40,3	42,8	47,3	58,3	74	90	121
		PN25/40	(kg)	36,3	37,8	40,3	43,3	39,3	51,8	60,3	70,3	87	102	146
	H		(mm)	--	--	--	--	--	--	--	--	--	--	1101
	AUMA SA 10.2	PN16	(kg)	--	--	--	--	--	--	--	--	--	--	125
		PN25/40	(kg)	--	--	--	--	--	--	--	--	--	--	150

Standard-flange dimensions refer to page 27. **(For version with AUMA SA Ex other heights.)**

Face-to-face dimension FTF series 1 according to DIN EN 558

Parts

Pos.	Description	Fig. 12.405 Fig. 12.460	Fig. 22.405 / Fig. 23.405 Fig. 22.460 / Fig. 23.460	Fig. 34.405 / Fig. 35.405 Fig. 34.460 / Fig. 35.460	Fig. 55.405 Fig. 55.460
1	Body	EN-GJL-250 , EN-JL1040	EN-GJS-400-18U-LT, EN-JS1049	GP240GH+N, 1.0619+N	GX5CrNiMo19-11-2, 1.4408
1.2	Seat ring	X20Cr13+QT, 1.4021+QT		X20Cr13+QT, 1.4021+QT >DN50: G19 9 Nb Si, 1.4551	--
3	Plug *	X20Cr13+QT, 1.4021+QT			X6CrNiMoTi17-12-2, 1.4571
4	Straight spin *	46S20+C, 1.0727+C			
5	Stem *	X20Cr13+QT, 1.4021+QT			X6CrNiMoTi17-12-2, 1.4571
7	Mounting bonnet	EN-GJS-400-18U-LT, EN-JS1049		GP240GH+N, 1.0619+N	GX5CrNiMo19-11-2, 1.4408
8	Guide bushing	X20Cr13+QT, 1.4021+QT (hardened)			X6CrNiMoTi17-12-2, 1.4571
9	Gasket *	Pure graphite (CrNi laminated with graphite)			
10	Studs	25CrMo4, 1.7218			A4 - 70
11	Hexagon nuts	C35E, 1.1181			A4
12	V-ring unit *	PTFE			
14	Washer *	X5CrNi18-10, 1.4301			
15	Spring *	X12CrNi17-7, 1.4310			
16	Bushing *	PTFE (reinforced)			
17	Sealing ring *	Cu / Soft iron			X6CrNiMoTi17-12-2, 1.4571
18	Scraper *	PTFE (reinforced)			
19	Screw joint *	X8CrNiS18-9, 1.4305			
20.1	Bellows housing	EN-GJS-400-18U-LT, EN-JS1049		GP240GH+N, 1.0619+N	GX5CrNiMo19-11-2, 1.4408
20.2	Mounting bonnet	EN-GJS-400-18U-LT, EN-JS1049		GP240GH+N, 1.0619+N	GX5CrNiMo19-11-2, 1.4408
20.3	Stem- / Bellows unit *	X20Cr13+QT, 1.4021+QT / X6CrNiTi18-10, 1.4541			X6CrNiMoTi17-12-2, 1.4571
20.4	Guide bushing	X20Cr13+QT, 1.4021+QT (hardened)			X6CrNiMoTi17-12-2, 1.4571
20.5	Guide bushing	X20Cr13+QT, 1.4021+QT (hardened)			X6CrNiMoTi17-12-2, 1.4571
20.6	Gasket *	Pure graphite (CrNi laminated with graphite)			
20.7	Studs	25CrMo4, 1.7218			A4 - 70
20.8	Hexagon nuts	C35E, 1.1181			A4
20.9	Straight pin (DN125-150)	St			
20.10	Packing ring *	Pure graphite			
20.12	Washer *	X5CrNi18-10, 1.4301			
20.17	Screw joint *	X8CrNiS18-9, 1.4305			
25	Stem adapter *	X20Cr13+QT, 1.4021+QT			X6CrNiMoTi17-12-2, 1.4571
26	Straight spin *	X12CrNi17-7, 1.4310			
* Spare parts					

Information / restriction of technical rules need to be observed!

ARI-Valves of EN-JL1040 are not allowed to be operated in systems acc. to TRD 110.

A production allowance acc. to TRB 801 No. 45 exists (acc. to TRB 801 No. 45 EN-JL1040 is not allowed.)

The engineer, designing a system or a plant, is responsible for the selection of the correct valve.

max. permissible closing pressures on flow-to-open P2 = 0
Observe restrictions by Pressure-temperature-ratings, refer to page 27.

Fig. 405

DN			15	20	25	32	40	50	65	80	100	125	150
Kvs-value			4,2	7,4	12	19	31	47	77	120	188	288	410
Travel (mm)			4	5	7	8	10	13	17	20	25	32	38
Max. differential pressure drop (bar)			2	2	2	2	2	2	2	2	1,5	1,5	1
Actuator [1] **AUMA SA 07.2** Output drive Form A TR 20 x 4 - LH	Closing pressure (bar)	**I./II.**	40	40	40	40	40	40	39,7	25,8	16,3	10	6,7
	Torque (Nm)		10	10	10	10	15	20	30	30	30	30	30
	Operating time [2] (s)		11	13	19	21	27	35	16	19	23	30	36
	Output drive (rpm)		5,6						16				
Actuator [1] **AUMA SA 07.6** Output drive Form A TR 26 x 5 - LH	Closing pressure (bar)	**I./II.**							40	37,3	23,8	14,9	10,1
	Torque (Nm)								45	60	60	60	60
	Operating time [2] (s)								13	15	19	24	29
	Output drive (rpm)								16				
Actuator [1] **AUMA SA 10.2** Output drive Form A TR 26 x 5 - LH	Closing pressure (bar)	**I./II.**								40	28,3	26,5	18,3
	Torque (Nm)									70	70	100	100
	Operating time [2] (s)									15	19	24	29
	Output drive (rpm)									16			

I. Fig. 405: PTFE-V-ring unit; **II. Fig. 405: PTFE- / Pure graphite-packing**

Fig. 460

DN			15	20	25	32	40	50	65	80	100	125	150
Kvs-value			4,2	7,4	12	19	31	47	77	120	188	288	410
Travel (mm)			4	5	7	8	10	13	17	20	25	32	38
Max. differential pressure drop (bar)			2	2	2	2	2	2	2	2	1,5	1,5	1
Actuator [1] **AUMA SA 07.2** Output drive Form A TR 20 x 4 - LH	Closing pressure (bar)	**III.**	40	40	40	40	40	40	39,5	25,6	16,1	9,9	6,6
	Torque (Nm)		10	10	10	10	15	20	30	30	30	30	30
	Operating time [2] (s)		11	13	19	21	27	35	16	19	23	30	36
	Output drive (rpm)		5,6						16				
Actuator [1] **AUMA SA 07.6** Output drive Form A TR 26 x 5 - LH	Closing pressure (bar)	**III.**							40	26,7	16,9	10,4	10
	Torque (Nm)								45	45	45	45	60
	Operating time [2] (s)								13	15	19	24	29
	Output drive (rpm)								16				
Actuator [1] **AUMA SA 10.2** Output drive Form A TR 26 x 5 - LH	Closing pressure (bar)	**III.**											18,2
	Torque (Nm)												100
	Operating time [2] (s)												29
	Output drive (rpm)												16

III. Fig. 460: Bellows seal

Higher closing pressures on request

[1] Motor voltage: 400V 50Hz 3~
(Other voltages on request)
Technical data for actuator refer to price list.

[2] Indicated operating times with 50Hz.

Stop valve in straightway form with electric actuator AUMA SA (DN 125v-150v / DN 200-250)

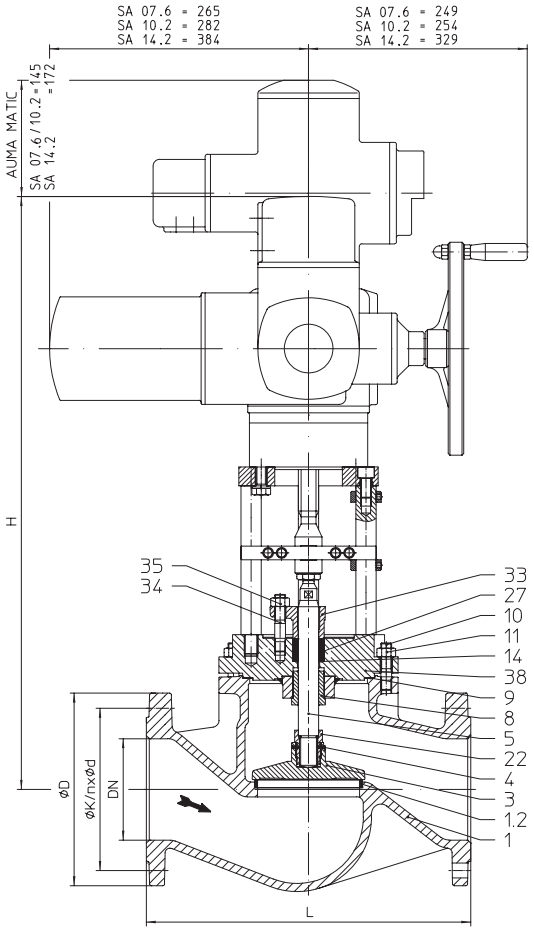

Fig. 405

Figure	Nominal pressure	Material	Nominal diameter
12.405 / 12.460	PN16	EN-JL1040	DN125v-150v DN200-250
22.405 / 22.460	PN16	EN-JS1049	DN125v-150v DN200-250
23.405 / 23.460	PN25	EN-JS1049	DN125v-150v
34.405 / 34.460	PN25	1.0619+N	DN125v-150v DN200-250
35.405 / 35.460	PN40	1.0619+N	DN125v-150v DN200-250

Other materials and versions on request.

Stem sealing

Fig. 405: • PTFE-packing -10°C up to +250°C
• Pure graphite-packing -10°C up to +450°C

Fig. 460: • Stainless steel bellows seal with safety stuffing box -60°C up to +450°C

Plug design

standard: • Isolation plug

optional: • Isolation plug with PTFE soft seat (max. 200°C)

Shut off class (seat / plug leakage classes)

• Metal seat - Leakage class 1 acc. to DIN 3230 T3 / B0
• Metal seat / PTFE - Leakage class 1 acc. to DIN 3230 T3 / B0

Closing pressures refer to page 16.

Technical data for actuator refer to data sheet..

Selection of possible applications

Industrial installations, processing technology, plant manufacturing, etc.
(other applications on request)

Selection of possible flow media

Fig. 405: Cooling water, cooling brine, warm water, hot water, steam, gas, etc.

Fig. 460: Refrigerant, Cooling water, warm water, hot water, thermal oil, steam, gas, etc.

(other flow media on request)

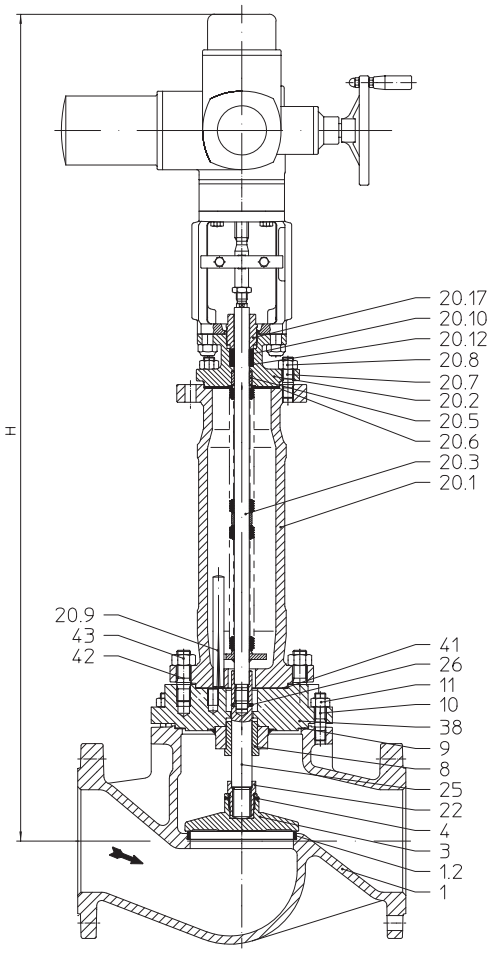

Fig. 460

Dimensions and weights

DN				125v	150v	200	250
L			(mm)	400	480	600	730
Fig. 405	H		(mm)	--	--	844	904
	AUMA SA 07.6	PN16	(kg)	--	--	163	235
		PN25/40	(kg)	--	--	194	271
	H		(mm)	--	--	856	916
	AUMA SA 10.2	PN16	(kg)	--	--	167	239
		PN25/40	(kg)	--	--	198	275
	H		(mm)	846	877	931	991
	AUMA SA 14.2	PN16	(kg)	110	127	197	269
		PN25/40	(kg)	141	181	228	305
Fig. 460	H		(mm)	--	--	1288	1349
	AUMA SA 07.6	PN16	(kg)	--	--	167	247
		PN25/40	(kg)	--	--	197	282
	H		(mm)	--	--	1300	1361
	AUMA SA 10.2	PN16	(kg)	--	--	171	251
		PN25/40	(kg)	--	--	201	286

Standard-flange dimensions refer to page 27. **(For version with AUMA SA Ex other heights.)**

Face-to-face dimension FTF series 1 according to DIN EN 558

Parts

Pos.	Description	Fig. 12.405 Fig. 12.460	Fig. 22.405 / Fig. 23.405 Fig. 22.460 / Fig. 23.460	Fig. 34.405 / Fig. 35.405 Fig. 34.460 / Fig. 35.460
1	Body	EN-GJL-250 , EN-JL1040	EN-GJS-400-18U-LT, EN-JS1049	GP240GH+N, 1.0619+N
1.2	Seat ring	X20Cr13+QT, 1.4021+QT		X20Cr13+QT, 1.4021+QT >DN50: G19 9 Nb Si, 1.4551
3	Plug *	X20Cr13+QT, 1.4021+QT		
4	Straight spin *	46S20+C, 1.0727+C		
5	Stem *	X20Cr13+QT, 1.4021+QT		
8	Guide bushing	X20Cr13+QT, 1.4021+QT (hardened)		
9	Gasket *	Pure graphite (CrNi laminated with graphite)		
10	Studs	25CrMo4, 1.7218		
11	Hexagon nuts	C35E, 1.1181		
14	Washer *	X5CrNi18-10, 1.4301		
20.1	Bellows housing	EN-GJS-400-18U-LT, EN-JS1049		GP240GH+N, 1.0619+N
20.2	Mounting bonnet	EN-GJS-400-18U-LT, EN-JS1049		GP240GH+N, 1.0619+N
20.3	Stem- / Bellows unit *	X20Cr13+QT, 1.4021+QT / X6CrNiTi18-10, 1.4541		
20.5	Guide bushing	X20Cr13+QT, 1.4021+QT (hardened)		
20.6	Gasket *	Pure graphite (CrNi laminated with graphite)		
20.7	Studs	25CrMo4, 1.7218		
20.8	Hexagon nuts	C35E, 1.1181		
20.9	Straight pin	St		
20.10	Packing ring *	Pure graphite		
20.12	Washer *	X5CrNi18-10, 1.4301		
20.17	Screw joint *	X8CrNiS18-9, 1.4305		
22	Screw joint *	X14CrMoS17+QT, 1.4104+QT		
25	Stem adapter *	X20Cr13+QT, 1.4021+QT		
26	Straight spin *	X12CrNi17-7, 1.4310		
27	Packing ring *	PTFE or Pure graphite		
33	Packing box flange	EN-GJS-400-15, EN-JS1030		
34	Studs	25CrMo4, 1.7218		
35	Hexagon nut	C35E, 1.1181		
38	Stuffing box housing	EN-GJS-400-18U-LT, EN-JS1049		GP240GH+N, 1.0619+N
41	Gasket *	Pure graphite		
42	Studs	25CrMo4, 1.7218		
43	Hexagon nut	C35E, 1.1181		
* Spare parts				

Information / restriction of technical rules need to be observed!

ARI-Valves of EN-JL1040 are not allowed to be operated in systems acc. to TRD 110.

A production allowance acc. to TRB 801 No. 45 exists (acc. to TRB 801 No. 45 EN-JL1040 is not allowed.)

The engineer, designing a system or a plant, is responsible for the selection of the correct valve.

max. permissible closing pressures on flow-to-open P2 = 0
Observe restrictions by Pressure-temperature-ratings, refer to page 27.

Fig. 405

DN			125v	150v	200	250
Kvs-value			288	410	725	1145
Travel (mm)			32	38	50	65
Max. differential pressure drop (bar)			1,5	1	0,8	0,8
Actuator [1] **AUMA SA 07.6** Output drive Form A TR 26 x 5 - LH	Closing pressure (bar)	**II.**			5,3	3,3
	Torque (Nm)				60	60
	Operating time [2] (s)				38	49
	Output drive (rpm)				16	
Actuator [1] **AUMA SA 10.2** Output drive Form A TR 26 x 5 - LH	Closing pressure (bar)	**II.**			12,3	7,9
	Torque (Nm)				120	120
	Operating time [2] (s)				38	49
	Output drive (rpm)				16	
Actuator [1] **AUMA SA 14.2** Output drive Form A TR 30 x 6 - LH	Closing pressure (bar)	**II.**	40	39,3	22	14,2
	Torque (Nm)		200	250	250	250
	Operating time [2] (s)		20	24	31	41
	Output drive (rpm)		16			

II. Fig. 405: PTFE- / Pure graphite-packing

Fig. 460

DN			125v	150v	200	250
Kvs-value			--	--	725	1145
Travel (mm)			--	--	50	65
Max. differential pressure drop (bar)			1,5	1	0,8	0,8
Actuator [1] **AUMA SA 07.6** Output drive Form A TR 26 x 5 - LH	Closing pressure (bar)	**III.**			5,3	3,3
	Torque (Nm)				60	60
	Operating time [2] (s)				38	49
	Output drive (rpm)				16	
Actuator [1] **AUMA SA 10.2** Output drive Form A TR 26 x 5 - LH	Closing pressure (bar)	**III.**			8,8	5,6
	Torque (Nm)				90	90
	Operating time [2] (s)				38	49
	Output drive (rpm)				16	

III. Fig. 460: Bellows seal

Higher closing pressures on request.

[1] Motor voltage: 400V 50Hz 3~
(Other voltages on request)
Technical data for actuator refer to price list.

[2] Indicated operating times with 50Hz.

Stop valve in straightway form with pneumatic actuator DP (DN 15-150)

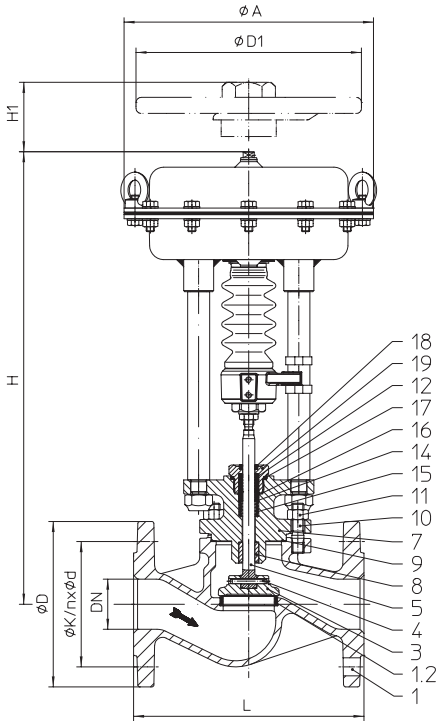

Fig. 405

Figure	Nominal pressure	Material	Nominal diameter
12.405 / 12.460	PN16	EN-JL1040	DN15-150
22.405 / 22.460	PN16	EN-JS1049	DN15-150
23.405 / 23.460	PN25	EN-JS1049	DN15-150
34.405 / 34.460	PN25	1.0619+N	DN15-150
35.405 / 35.460	PN40	1.0619+N	DN15-150
55.405 / 55.460	PN40	1.4408	DN15-150
Other materials and versions on request.			

Stem sealing

Fig. 405:
- PTFE-V-ring unit -10°C up to +220°C
- PTFE-packing -10°C up to +250°C
- Pure graphite-packing -10°C up to +450°C

Fig. 460:
- Stainless steel bellows seal with safety stuffing box -60°C up to +450°C

Plug design

standard:
- Isolation plug

optional:
- Isolation plug with PTFE soft seat (max. 200°C)

Shut off class (seat / plug leakage classes)
- Metal seat - Leakage class 1 acc. to DIN 3230 T3 / B0
- Metal seat / PTFE - Leakage class 1 acc. to DIN 3230 T3 / B0

Closing pressures refer to page 20-22.

Technical data for actuator refer to data sheet..

Selection of possible applications

Industrial installations, processing technology, plant manufacturing, etc.
(other applications on request)

Selection of possible flow media

Fig. 405: Cooling water, cooling brine, warm water, hot water, steam, gas, etc.

Fig. 460: Refrigerant, Cooling water, warm water, hot water, thermal oil, steam, gas, etc.

(other flow media on request)

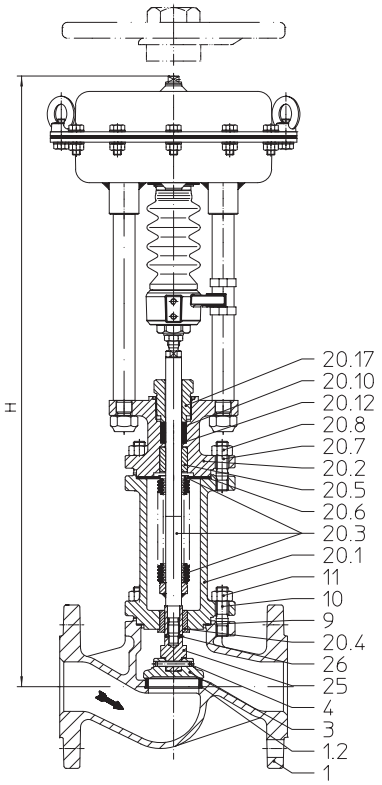

Fig. 460

Top mounted handwheel

Actuator		DP32	DP33	DP34
Ø D1	(mm)	225	300	400
H1	(mm)	270	284	442
Weight	(kg)	5	6	17
Technical data for actuator refer to data sheet DP32-34Tri.				

Dimensions and weights

DN				15	20	25	32	40	50	65	80	100	125	150
L			(mm)	130	150	160	180	200	230	290	310	350	400	480
DP32	Ø A		(mm)	250									--	--
	Fig. 405	H	(mm)	411	411	439	451	457	463	476	492	511	--	--
		PN16	(kg)	12,6	13,3	14,2	15,8	17,7	20,6	25,7	31,4	42	--	--
		PN25/40	(kg)	13,4	14,2	15,5	17,3	19,8	22,5	29,7	35,9	49	--	--
	Fig. 460	H	(mm)	616	616	624	635	626	628	712	724	740	--	--
		PN16	(kg)	17	17	18	20,5	23	25,5	28,5	39,5	55	--	--
		PN25/40	(kg)	19	20,5	23	26	32	34,5	41,5	51,5	68	--	--
DP33	Ø A		(mm)	300									--	--
	Fig. 405	H	(mm)	472	472	480	481	487	504	531	547	566	590	650
		PN16	(kg)	18,6	19,3	20,2	21,8	23,7	26,6	31,7	37,4	48	70	91
		PN25/40	(kg)	19,4	20,2	21,5	23,3	25,8	28,5	35,7	41,9	55	82	113
	Fig. 460	H	(mm)	657	657	665	665	656	669	767	779	795	807	976
		PN16	(kg)	23	23	24	26,5	29	31,5	34,5	45,5	61	77	108
		PN25/40	(kg)	25	26,5	29	32	38	40,5	47,5	57,5	74	89	133
DP34	Ø A		(mm)	--	--	--	--	405						
	Fig. 405	H	(mm)	--	--	--	--	609	615	628	632	651	701	761
		PN16	(kg)	--	--	--	--	53,7	56,6	61,7	67,4	78	100	121
		PN25/40	(kg)	--	--	--	--	55,8	58,5	65,7	71,9	85	112	143
	Fig. 460	H	(mm)	--	--	--	--	796	798	882	876	892	929	1087
		PN16	(kg)	--	--	--	--	59	61,5	64,5	75,5	91	107	138
		PN25/40	(kg)	--	--	--	--	68	70,5	77,5	87,5	104	119	163

Standard-flange dimensions refer to page 27.

Face-to-face dimension FTF series 1 according to DIN EN 558.

Parts

Pos.	Description	Fig. 12.405 Fig. 12.460	Fig. 22.405 / Fig. 23.405 Fig. 22.460 / Fig. 23.460	Fig. 34.405 / Fig. 35.405 Fig. 34.460 / Fig. 35.460	Fig. 55.405 Fig. 55.460
1	Body	EN-GJL-250 , EN-JL1040	EN-GJS-400-18U-LT, EN-JS1049	GP240GH+N, 1.0619+N	GX5CrNiMo19-11-2, 1.4408
1.2	Seat ring	X20Cr13+QT, 1.4021+QT		X20Cr13+QT, 1.4021+QT >DN50: G19 9 Nb Si, 1.4551	--
3	Plug *	X20Cr13+QT, 1.4021+QT			X6CrNiMoTi17-12-2, 1.4571
4	Straight spin *	46S20+C, 1.0727+C			
5	Stem *	X20Cr13+QT, 1.4021+QT			X6CrNiMoTi17-12-2, 1.4571
7	Mounting bonnet	EN-GJS-400-18U-LT, EN-JS1049		GP240GH+N, 1.0619+N	GX5CrNiMo19-11-2, 1.4408
8	Guide bushing	X20Cr13+QT, 1.4021+QT (hardened)			X6CrNiMoTi17-12-2, 1.4571
9	Gasket *	Pure graphite (CrNi laminated with graphite)			
10	Studs	25CrMo4, 1.7218			A4 - 70
11	Hexagon nuts	C35E, 1.1181			A4
12	V-ring unit *	PTFE			
14	Washer *	X5CrNi18-10, 1.4301			
15	Spring *	X12CrNi17-7, 1.4310			
16	Bushing *	PTFE (reinforced)			
17	Sealing ring *	Cu / Soft iron			X6CrNiMoTi17-12-2, 1.4571
18	Scraper *	PTFE (reinforced)			
19	Screw joint *	X8CrNiS18-9, 1.4305			
20.1	Bellows housing	EN-GJS-400-18U-LT, EN-JS1049		GP240GH+N, 1.0619+N	GX5CrNiMo19-11-2, 1.4408
20.2	Mounting bonnet	EN-GJS-400-18U-LT, EN-JS1049		GP240GH+N, 1.0619+N	GX5CrNiMo19-11-2, 1.4408
20.3	Stem- / Bellows unit *	X20Cr13+QT, 1.4021+QT / X6CrNiTi18-10, 1.4541			X6CrNiMoTi17-12-2, 1.4571
20.4	Guide bushing	X20Cr13+QT, 1.4021+QT (hardened)			X6CrNiMoTi17-12-2, 1.4571
20.5	Guide bushing	X20Cr13+QT, 1.4021+QT (hardened)			X6CrNiMoTi17-12-2, 1.4571
20.6	Gasket *	Pure graphite (CrNi laminated with graphite)			
20.7	Studs	25CrMo4, 1.7218			A4 - 70
20.8	Hexagon nuts	C35E, 1.1181			A4
20.9	Straight pin (DN125-150)	St			
20.10	Packing ring *	Pure graphite			
20.12	Washer *	X5CrNi18-10, 1.4301			
20.17	Screw joint *	X8CrNiS18-9, 1.4305			
25	Stem adapter *	X20Cr13+QT, 1.4021+QT			X6CrNiMoTi17-12-2, 1.4571
26	Straight spin *	X12CrNi17-7, 1.4310			

* Spare parts

Information / restriction of technical rules need to be observed!

ARI-Valves of EN-JL1040 are not allowed to be operated in systems acc. to TRD 110.

A production allowance acc. to TRB 801 No. 45 exists (acc. to TRB 801 No. 45 EN-JL1040 is not allowed.)

The engineer, designing a system or a plant, is responsible for the selection of the correct valve.

max. permissible closing pressures on flow-to-open P2 = 0
Observe restrictions by Pressure-temperature-ratings, refer to page 27.

Spring closes														
DN				**15**	**20**	**25**	**32**	**40**	**50**	**65**	**80**	**100**	**125**	**150**
Kvs-value				4,2	7,4	12	19	31	47	77	120	188	288	410
Travel (mm)				4	5	7	8	10	13	17	20	25	32	38
Max. differential pressure drop (bar)				2	2	2	2	2	2	2	2	1,5	1,5	1
Actuator **DP32**	Air supply pressure min. (bar)	1,4	**I.**	40	40	22,4	14,3	5,4						
			II.	40	39,3	20,5	12,9	4,6						
			III.	29,9	28,1	19	11,7	3,4						
		2,8	**I.**			40	39,3	23,3	12,3	5	2,7			
			II.		40	40	37,9	22,5	11,7	4,6	2,4			
			III.	40	40	40	36,8	21,3	10,9	4,3	2,2			
		4,0	**I.**				40	40	21,7	8,4	4,9	2,6		
			II.				40	39,2	21,2	7,9	4,6	2,5		
			III.				40	38	20,4	7,6	4,4	2,3		
Actuator **DP33**		1,4	**I.**	40 c)	40 c)	40 c)	33,9 c)	16,9 c)	8,5 c)	3				
			II.	40 c)	40 c)	40 c)	32,5 c)	16,1 c)	8 c)	2,5				
			III.	40 a)	40 a)	40 a)	31,4 a)	14,9 a)	7,2 a)	2,3 a)				
		2,7	**I.**				40 a)	40 a)	23,2 a)	10,8	5,4	1,8		
			II.				40 a)	40 a)	22,7 a)	10,4	5,1	1,6		
			III.				40	39,8	21,9	10,1	5	1,5		
		3,3	**I.**							13	8	4,7		
			II.							12,6	7,7	4,5		
			III.							12,3	7,5	4,4		
		4,5	**I.**						33,5	19,4	12,2	7,4		
			II.						32,9	18,9	11,9	7,2		
			III.						32,1	18,6	11,7	7,1		
Actuator **DP34**		1,4	**I.**					40 f)	28,2 f)	14,8 b)	8,5 b)	4,3 b)	1,6	
			II.					40 f)	27,7 f)	14,4 b)	8,2 b)	4,1 b)	1,5	
			III.					40 d)	26,9 d)	14,1 d)	8 d)	4 d)	1,4 e)	
		2,7	**I.**						40 d)	26,8	20,9	11,6	5,7	2,9
			II.						40 d)	26,4	20,6	11,4	5,6	2,8
			III.						40 b)	26,1 b)	20,5 b)	11,3 b)	5,5 b)	2,7
		3,3	**I.**							39,7	25,7	16,2	9,6	5,7
			II.							39,2	25,4	16,1	9,5	5,6
			III.							39 b)	25,3 a)	15,9 a)	9,5 a)	5,5
		4,5	**I.**							40	37,3	21,3	11,2	8
			II.							40	37	21,1	11,1	7,9
			III.							40 a)	28,1 a)	17,8 a)	11 a)	7,8

I. Fig. 405: PTFE-V-ring unit; **II. Fig. 405: PTFE- / pure graphite-packing;** **III. Fig. 460: Bellows seal**

Air supply pressure max. of pneumatic actuators DP: max. permissible 6 bar

Air supply pressure max. limit of control valve: max. permissible a) 5 bar b) 4,5 bar c) 4 bar d) 3,5 bar e) 3 bar f) 2,5 bar

max. permissible closing pressures on flow-to-open P2 = 0
Observe restrictions by Pressure-temperature-ratings, refer to page 27.

Spring opens on air failure

				DN	15	20	25	32	40	50	65	80	100	125	150
				Kvs-value	4,2	7,4	12	19	31	47	77	120	188	288	410
				Travel (mm)	4	5	7	8	10	13	17	20	25	32	38
				Max. differential pressure drop (bar)	2	2	2	2	2	2	2	2	1,5	1,5	1
Actuator DP32	Air supply pressure min. (bar)	1,4	I.		40 a)	40 a)	22,4 a)	14,3 a)	5,4 a)						
			II.		40 a)	39,3 a)	20,5 a)	12,9 a)	4,6 a)						
			III.		29,9	28,1	19	11,7	3,4						
		2	I.				40 a)	31,3 a)	15,5 a)	7,6 a)	2,5				
			II.			40 a)	40 a)	30 a)	14,7 a)	7,1 a)	2,1				
			III.		40	40	40	28,8	13,4	6,3	1,8				
		2,5	I.					40 a)	23,9 a)	13,1 a)	5,8	2,7			
			II.					40 a)	23 a)	12,5 a)	5,4	2,4			
			III.					40	21,8	11,7	5,1	2,2			
		3	I.						32,3 a)	18,5 a)	9,1	4,9	2,1		
			II.						31,4 a)	17,9 a)	8,7	4,6	1,9		
			III.						30,2	17,2	8,4	4,4	1,8		
		3,5	I.						40 a)	23,9 a)	12,5	7,1	3,5		
			II.						39,8 a)	23,4 a)	12	6,8	3,3		
			III.						38,6	22,6	11,8	6,6	3,2		
		4	I.							29,3 a)	15,8	9,3	4,9		
			II.						40 a)	28,8 a)	15,3	9	4,8		
			III.						40	28	15,1	8,8	4,6		
		4,5	I.							34,7 a)	19,1	11,5	6,4		
			II.							34,2 a)	18,6	11,2	6,2		
			III.							33,4	18,4	11	6,1		
		5	I.							40 a)	22,4	13,7	7,8		
			II.							39,6 a)	22	13,4	7,6		
			III.							38,8	21,7	13,2	7,5		
		5,5	I.								25,7	15,9	9,3		
			II.								25,3	15,6	9,1		
			III.							40	25	15,4	8,9		
		6	I.								29	18,1	10,7		
			II.								28,6	17,8	10,5		
			III.								28,3	17,6	10,4		
Actuator DP33	Air supply pressure min. (bar)	1,4	I.		40 d)	40 d)	40 d)	34,1 d)	17 d)	8,6 d)	3 d)				
			II.		40 d)	40 d)	40 d)	32,7 d)	16,2 d)	8 d)	2,6 d)				
			III.		40 d)	40 d)	40 d)	31,5 d)	15 d)	7,2 d)	2,3 d)				
		2	I.					40 d)	33 d)	18,9 d)	9,4 d)	5 d)	2,1 d)		
			II.					40 d)	32,2 d)	18,4 d)	8,9 d)	4,7 d)	1,9 d)		
			III.					40 d)	31 d)	17,6 d)	8,7 d)	4,5 d)	1,8 d)		
		2,5	I.						40 d)	27,5 d)	14,6 d)	8,5 d)	4,4 d)	1,8 d)	
			II.						40 d)	27 d)	14,2 d)	8,2 d)	4,2 d)	1,7 d)	
			III.						40 d)	26,2 d)	13,9 d)	8,1 d)	4,1 d)	1,6 d)	
		3	I.							36,2 d)	19,9 d)	12 d)	6,7 d)	3,3 d)	1,7 d)
			II.							35,6 d)	19,5 d)	11,7 d)	6,5 d)	3,2 d)	1,6 d)
			III.							34,8 d)	19,2 d)	11,6 d)	6,4 d)	3,1 d)	1,5 d)
		3,5	I.							40 d)	25,2	15,5	9	4,8	2,7
			II.							40 d)	24,7	15,2	8,8	4,6	2,6
			III.							40 a)	24,5 a)	15,1 a)	8,7 a)	4,6 a)	2,5
		4	I.								30,4	19	11,3	6,3	3,8
			II.								30	18,8	11,1	6,1	3,7
			III.								29,7 a)	18,6 a)	11 a)	6 a)	3,5
		4,5	I.								35,7	22,5	13,6	7,7	4,8
			II.								35,3	22,3	13,4	7,6	4,7
			III.								35 a)	22,1 a)	13,3 a)	7,5 a)	4,6
		5	I.								40	26,1	15,9	9,2	5,8
			II.								40	25,8	15,7	9,1	5,7
			III.								40 a)	25,6 a)	15,5 a)	9 a)	5,6
		5,5	I.									29,6	18,1	10,7	6,9
			II.									29,3	18	10,5	6,8
			III.												6,7
		6	I.									33,1	20,4	12,2	7,9
			II.									32,8	20,2	12	7,8
			III.												7,7

I. Fig. 405: PTFE-V-ring unit; II. Fig. 405: PTFE- / pure graphite-packing; III. Fig. 460: Bellows seal

Air supply pressure max. of pneumatic actuators DP: max. permissible 6 bar
Air supply pressure max. limit of control valve: max. permissible a) 5 bar b) 4,5 bar c) 4 bar d) 3,5 bar e) 3 bar f) 2,5 bar

max. permissible closing pressures on flow-to-open P2 = 0
Observe restrictions by Pressure-temperature-ratings, refer to page 27.

Spring opens on air failure

DN				15	20	25	32	40	50	65	80	100	125	150
Kvs-value				4,2	7,4	12	19	31	47	77	120	188	288	410
Travel (mm)				4	5	7	8	10	13	17	20	25	32	38
Max. differential pressure drop (bar)				2	2	2	2	2	2	2	2	1,5	1,5	1
Actuator DP34	Air supply pressure min. (bar)	1,4	I.							10,8 c)	5,4 b)	1,7 b)	1,6 a)	
			II.							10,4 c)	5,1 b)	1,5 b)	1,5 a)	
			III.								4,9 e)	1,4 e)	1,4 e)	
		2	I.							23,5 c)	13,9 b)	7,2 b)	5,2 a)	2,9 a)
			II.							23,1 c)	13,6 b)	7,1 b)	5,1 a)	2,8 a)
			III.								13,4 e)	6,9 e)	5 e)	2,7 a)
		2,5	I.							34,2 c)	20,9 b)	11,9 b)	8,2 a)	5 a)
			II.							33,7 c)	20,6 b)	11,7 b)	8 a)	4,9 a)
			III.								20,5 e)	11,6 e)	8 e)	4,8 a)
		3	I.							40 c)	28 b)	16,5 b)	11,1 a)	7,1 a)
			II.							40 c)	27,7 b)	16,3 b)	11 a)	7 a)
			III.								27,5 e)	16,2 e)	10,9 e)	6,9 a)
		3,5	I.								35 b)	21,1 b)	14,1 a)	9,2 a)
			II.								34,8 b)	20,9 b)	14 a)	9,1 a)
			III.											9 a)
		4	I.								40 b)	25,7 b)	17,1 a)	11,3 a)
			II.								40 b)	25,5 b)	17 a)	11,2 a)
			III.											11,1 a)
		4,5	I.									30,3 b)	20,1 a)	13,4 a)
			II.									30,1 b)	19,9 a)	13,3 a)
			III.											13,2 a)
		5	I.										23 a)	15,5 a)
			II.										22,9 a)	15,4 a)
			III.											15,3 a)
		5,5	I.											
			II.											
			III.											
		6	I.											
			II.											
			III.											

I. Fig. 405: PTFE-V-ring unit; **II. Fig. 405: PTFE- / pure graphite-packing;** **III. Fig. 460: Bellows seal**

Air supply pressure max. of pneumatic actuators DP: max. permissible 6 bar

Air supply pressure max. limit of control valve: max. permissible a) 5 bar b) 4,5 bar c) 4 bar d) 3,5 bar e) 3 bar

Stop valve in straightway form with pneumatic actuator DP (DN 125v-150v / DN 200-250)

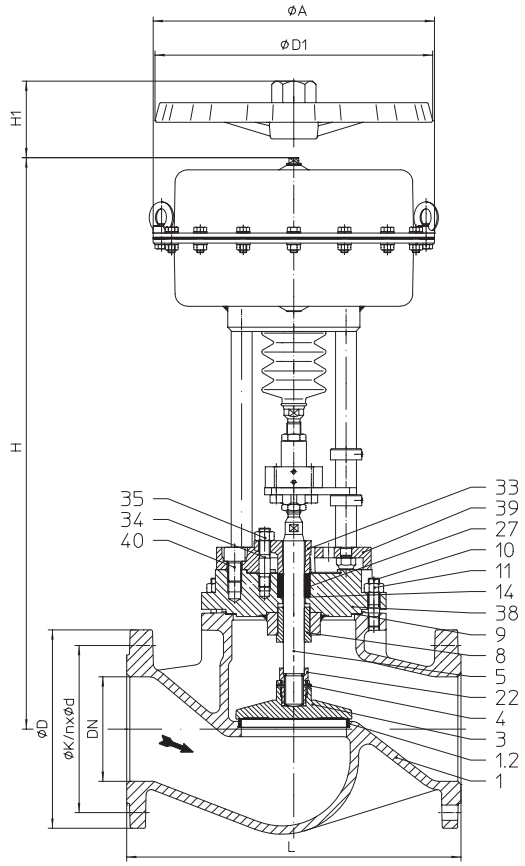

Fig. 405

Figure	Nominal pressure	Material	Nominal diameter
12.405 / 12.460	PN16	EN-JL1040	DN125v-150v DN200-250
22.405 / 22.460	PN16	EN-JS1049	DN125v-150v DN200-250
23.405 / 23.460	PN25	EN-JS1049	DN125v-150v
34.405 / 34.460	PN25	1.0619+N	DN125v-150v DN200-250
35.405 / 35.460	PN40	1.0619+N	DN125v-150v DN200-250
Other materials and versions on request.			

Stem sealing

Fig. 405: • PTFE-packing -10°C up to +250°C
• Pure graphite-packing -10°C up to +450°C

Fig. 460: • Stainless steel bellows seal with safety stuffing box -60°C up to +450°C

Plug design

standard: • Isolation plug

optional: • Isolation plug with PTFE soft seat (max. 200°C)

Shut off class (seat / plug leakage classes)

• Metal seat - Leakage class 1 acc. to DIN 3230 T3 / B0
• Metal seat / PTFE - Leakage class 1 acc. to DIN 3230 T3 / B0

Closing pressures refer to page 26.

Technical data for actuator refer to data sheet..

Selection of possible applications

Industrial installations, processing technology, plant manufacturing, etc.
(other applications on request)

Selection of possible flow media

Fig. 405: Cooling water, cooling brine, warm water, hot water, steam, gas, etc.

Fig. 460: Refrigerant, Cooling water, warm water, hot water, thermal oil, steam, gas, etc.

(other flow media on request)

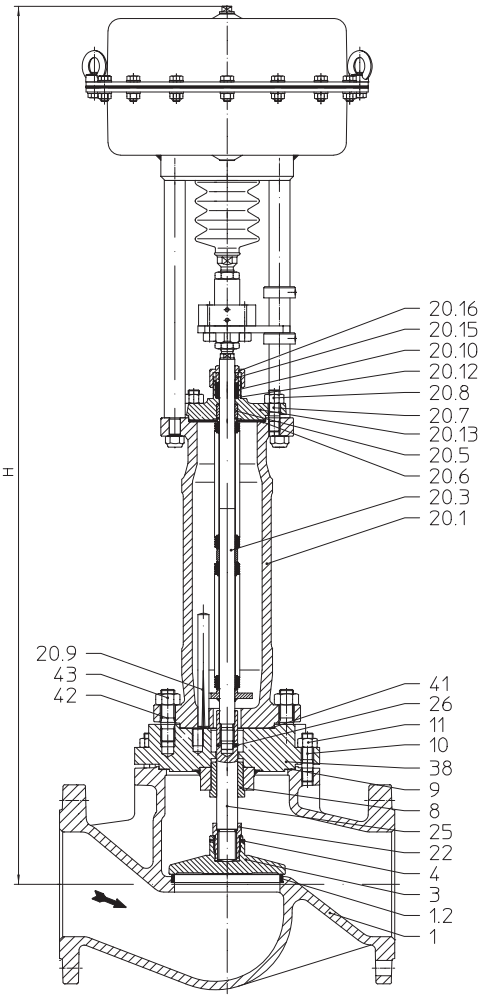

Fig. 460

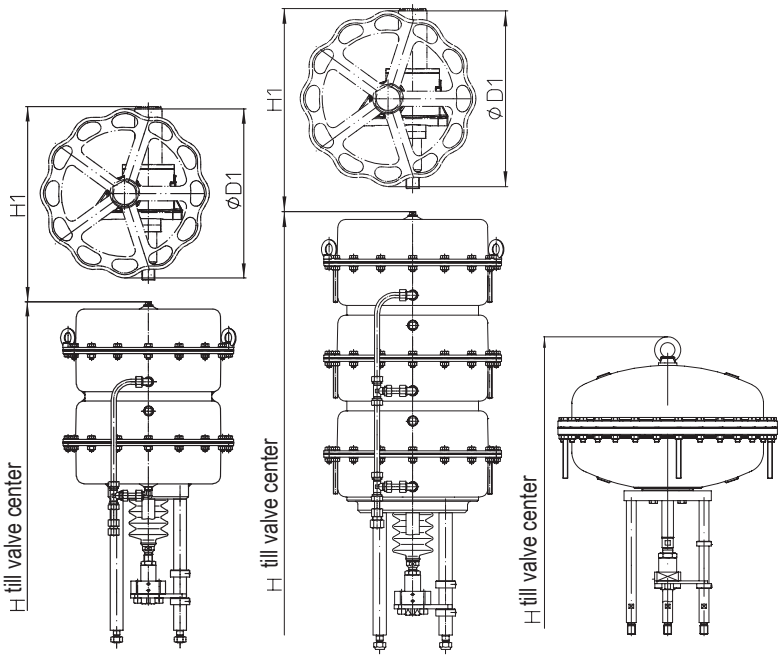

DP34T DP34Tri DP35

Top mounted handwheel

Actuator		DP34	DP34T	DP34Tri
Ø D1	(mm)	400	400	400
H1	(mm)	442	635	635
Weight	(kg)	17	41	41
Technical data for actuator refer to data sheet DP32-35.				

Dimensions and weights

DN				125v	150v	200	250
L			(mm)	400	480	600	730
DP34	Ø A		(mm)	--	--	405	
	Fig. 405	H	(mm)	--	--	824	904
		PN16 / PN25-40	(kg)	--	--	176 / 207	248 / 284
	Fig. 460	H	(mm)	--	--	1396	1427
		PN16 / PN25-40	(kg)	--	--	184 / 214	264 / 299
DP34T	Ø A		(mm)	405			
	Fig. 405	H	(mm)	977	1008	1094	1154
		PN16 / PN25-40	(kg)	177 / 191	204 / 231	247 / 278	319 / 355
	Fig. 460	H	(mm)	1456	1487	1541	1601
		PN16 / PN25-40	(kg)	182 / 195	302 / 238	255 / 285	335 / 370
DP34Tri	Ø A		(mm)	405			
	Fig. 405	H	(mm)	1199	1230	1316	1376
		PN16 / PN25-40	(kg)	211 / 225	238 / 265	281 / 312	353 / 389
	Fig. 460	H	(mm)	1648	1679	1763	1823
		PN16 / PN25-40	(kg)	216 / 229	247 / 272	289 / 319	369 / 404
DP35	Ø A		(mm)	755			
	Fig. 405	H	(mm)	1144	1175	1229	1289
		PN16 / PN25-40	(kg)	376 / 390	403 / 430	446 / 447	518 / 554
Standard-flange dimensions refer to page 27.							

Face-to-face dimension FTF series 1 according to DIN EN 558.

Parts

Pos.	Description	Fig. 12.405 Fig. 12.460	Fig. 22.405 / Fig. 23.405 Fig. 22.460 / Fig. 23.460	Fig. 34.405 / Fig. 35.405 Fig. 34.460 / Fig. 35.460
1	Body	EN-GJL-250 , EN-JL1040	EN-GJS-400-18U-LT, EN-JS1049	GP240GH+N, 1.0619+N
1.2	Seat ring	X20Cr13+QT, 1.4021+QT		X20Cr13+QT, 1.4021+QT >DN50: G19 9 Nb Si, 1.4551
3	Plug *	X20Cr13+QT, 1.4021+QT		
4	Straight spin *	46S20+C, 1.0727+C		
5	Stem *	X20Cr13+QT, 1.4021+QT		
8	Guide bushing	X20Cr13+QT, 1.4021+QT (hardened)		
9	Gasket *	Pure graphite (CrNi laminated with graphite)		
10	Studs	25CrMo4, 1.7218		
11	Hexagon nuts	C35E, 1.1181		
14	Washer *	X5CrNi18-10, 1.4301		
20.1	Bellows housing	EN-GJS-400-18U-LT, EN-JS1049		GP240GH+N, 1.0619+N
20.3	Stem- / Bellows unit *	X20Cr13+QT, 1.4021+QT / X6CrNiTi18-10, 1.4541		
20.5	Guide bushing	X20Cr13+QT, 1.4021+QT (hardened)		
20.6	Gasket *	Pure graphite (CrNi laminated with graphite)		
20.7	Studs	25CrMo4, 1.7218		
20.8	Hexagon nuts	C35E, 1.1181		
20.9	Straight pin	St		
20.10	Packing ring *	Pure graphite		
20.12	Washer *	X5CrNi18-10, 1.4301		
20.13	Stuffing box housing	GP240GH+N, 1.0619+N		
20.15	Packing follower *	X20Cr13+QT, 1.4021+QT		
20.16	Sleeve nut *	11SMnPb30+C, 1.0718+C		
22	Screw joint *	X14CrMoS17+QT, 1.4104+QT		
25	Stem adapter *	X20Cr13+QT, 1.4021+QT		
26	Straight spin *	X12CrNi17-7, 1.4310		
27	Packing ring *	PTFE or Pure graphite		
33	Packing box flange	EN-GJS-400-15, EN-JS1030		
34	Studs	25CrMo4, 1.7218		
35	Hexagon nut	C35E, 1.1181		
38	Stuffing box housing	EN-GJS-400-18U-LT, EN-JS1049		GP240GH+N, 1.0619+N
39	Adapter flange	EN-GJS-400-18U-LT, EN-JS1049		
40	Hexagon socket head screw	8.8 - A2B		
41	Gasket *	Pure graphite		
42	Studs	25CrMo4, 1.7218		
43	Hexagon nut	C35E, 1.1181		
* Spare parts				

Information / restriction of technical rules need to be observed!

ARI-Valves of EN-JL1040 are not allowed to be operated in systems acc. to TRD 110.

A production allowance acc. to TRB 801 No. 45 exists (acc. to TRB 801 No. 45 EN-JL1040 is not allowed.)

The engineer, designing a system or a plant, is responsible for the selection of the correct valve.

max. permissible closing pressures on flow-to-open P2 = 0
Observe restrictions by Pressure-temperature-ratings, refer to page 27.

Spring closes

DN				125v	150v	200	250
Kvs-value				288	410	725	1145
Travel (mm)				32	38	50	65
Max. differential pressure drop (bar)				1,5	1	0,8	0,8
Actuator DP34	Air supply pressure min. (bar)	3,3	II.			1,9	
			III.			1,9	
		4,5	II.			3,1	1,8
			III.			3,1	1,8
Actuator DP34T		1,7	II.	5,4 b)	2,7 b)		
			III.	5,4 d)	2,7 d)		
		2,9	II.	13,6	7,6	2,1	
			III.	13,6 b)	7,6 b)	2,2 b)	
		3,5	II.	21,5	13,3	5,5	
			III.	21,5 a)	13,3 a)	5,5 a)	
		4,5	II.	25,7	17,8	7,9	4,9
			III.	24,6 a)	16,9	7,9	4,9
Actuator DP34Tri		1,7	II.	9,5 d)	5,1 d)	1,2 d)	
			III.	9,5 f)	5,1 f)	1,2 f)	
		2,9	II.	21,7 b)	12,5 b)	4 b)	2,4 b)
			III.	21,8 d)	12,6 d)	4,1 d)	2,4 d)
		3,5	II.	33,6 a)	21 a)	9 a)	5,7 a)
			III.	24 c)	16,5 c)	9,1 b)	5,7 b)
		4,5	II.	40 a)	27,8 a)	12,6 a)	8 a)
Actuator DP35		4,3	II.		40	23,5	13,8

II. Fig. 405: PTFE- / Pure graphite-packing

Spring opens on air failure

DN				125v	150v	200	250
Kvs-value				288	410	725	1145
Travel (mm)				32	38	50	65
Max. differential pressure drop (bar)				1,5	1	0,8	0,8
Actuator DP34	Air supply pressure min. (bar)	2,5	II.			1,9	1
			III.			1,9 a)	1 a)
		3	II.			3,1	1,8
			III.			3,1 a)	1,8 a)
		3,5	II.			4,3	2,6
			III.			4,3 a)	2,6 a)
		4	II.			5,5	3,4
			III.			5,5 a)	3,4 a)
		4,5	II.			6,7	4,1
			III.			6,7 a)	4,1 a)
		5	II.			7,9	4,9
			III.			7,9 a)	4,9 a)
		5,5	II.			9,1	5,7
		6	II.			10,2	6,5
Actuator DP34T		1,5	II.	6,6 c)	3,5 b)		
			III.	6,6 e)	3,5 e)		
		2	II.	12,6 c)	7,7 b)	3,1 b)	1,8 b)
			III.	12,6 e)	7,7 e)	3,1 e)	1,8 e)
		2,5	II.	18,5 c)	11,9 b)	5,5 b)	3,4 b)
			III.	18,5 e)	11,9 e)	5,5 e)	3,4 e)
		3	II.	24,5 c)	16,1 b)	7,9 b)	4,9 b)
			III.	24,5 e)	16,1 e)	7,9 e)	4,9 e)
		3,5	II.	30,4 c)	20,2 b)	10,3 b)	6,5 b)
		4	II.	36,4 c)	24,4 b)	12,6 b)	8 b)
		4,5	II.		28,6 b)	15 b)	9,6 b)

III. Fig. 460: Bellows seal

Air supply pressure max. of pneumatic actuators DP: max. permissible 6 bar (DP34Tri: max. perm. 5 bar)

Air supply pressure max. limit of control valve: max. permissible a) 5 bar b) 4,5 bar c) 4 bar d) 3,5 bar e) 3 bar f) 2,5 bar

Standard-flange dimensions

Flanges acc. to DIN EN 1092-1/-2 (Flangeholes / -thickness tol. acc. to DIN 2533/2544/2545)

DN			15	20	25	32	40	50	65	80	100	125	150	200	250
PN16	ØD	(mm)	95	105	115	140	150	165	185	200	220	250	285	340	405
PN16	ØK	(mm)	65	75	85	100	110	125	145	160	180	210	240	295	355
PN16	n x Ød	(mm)	4x14	4x14	4x14	4x18	4x18	4x18	4x18	8x18	8x18	8x18	8x22	12x22	12x26
PN25	ØD	(mm)	95	105	115	140	150	165	185	200	235	270	300	360	425
PN25	ØK	(mm)	65	75	85	100	110	125	145	160	190	220	250	310	370
PN25	n x Ød	(mm)	4x14	4x14	4x14	4x18	4x18	4x18	8x18	8x18	8x22	8x26	8x26	12x26	12x30
PN40	ØD	(mm)	95	105	115	140	150	165	185	200	235	270	300	375	450
PN40	ØK	(mm)	65	75	85	100	110	125	145	160	190	220	250	320	385
PN40	n x Ød	(mm)	4x14	4x14	4x14	4x18	4x18	4x18	8x18	8x18	8x22	8x26	8x26	12x30	12x33

Pressure-temperature-ratings acc. to DIN EN 1092-2

Material			-60°C to <-10°C*	-10°C to 120°C	150°C	200°C	250°C	300°C	350°C	400°C	450°C
EN-JL1040	16	(bar)	--	16	14,4	12,8	11,2	9,6	--	--	--
EN-JS1049	16	(bar)	on request	16	15,5	14,7	13,9	12,8	11,2	--	--
EN-JS1049	25	(bar)	on request	25	24,3	23	21,8	20	17,5	--	--

Pressure-temperature-ratings acc. to manufacturers standard

Material			-60°C to <-10°C*	-10°C to120°C	150°C	200°C	250°C	300°C	350°C	400°C	450°C
1.0619+N	25	(bar)	18,7	25	23,9	22	20	17,2	16	14,8	8,2
1.0619+N	40	(bar)	30	40	38,1	35	32	28	25,7	23,8	13,1

Pressure-temperature-ratings acc. to DIN EN 1092-1

Material			-60°C to <-10°C*	-10°C to 100°C	150°C	200°C	250°C	300°C	350°C	400°C	450°C
1.4408	40	(bar)	40	40	36,3	33,7	31,8	29,7	28,5	27,4	--

Intermediate values for max. permissible operational pressures can be determined by linear interpolation of the given temperature / pressure chart.

* Valve with extended bonnet, studs and nuts made of A4-70 (at temperatures below -10°C)

Please indicate when ordering

- Figure-No.
- Nominal diameter
- Nominal pressure
- Body material
- Plug design
- Stem sealing
- Actuator
- Special design / accessories

Example:

Figure 35.405; Nominal diameter DN100; Nominal pressure PN40; Body material 1.0619+N; Isolation plug; Stem sealing PTFE-V-ring unit; ARI-PREMIO 12kN

Dimensions in mm
Weights in kg
Pressures in barg (gauge)
1 bar ≙ 10^5 Pa ≙ 0,1 MPa
Kvs in m^3/h

Stem sealing

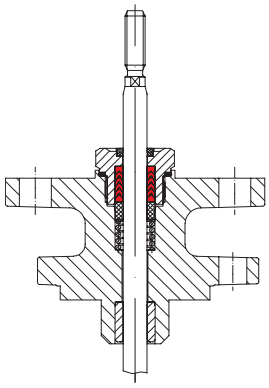

Spring loaded PTFE-V ring packing unit (to DN150)

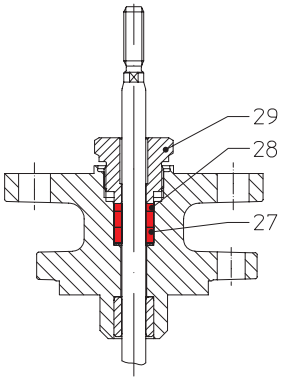

Pos.	Description	
27/28	Packing ring *	PTFE or Pure graphite
29	Screw joint *	X8CrNiS18-9, 1.4305

PTFE-/ Pure graphite-packing

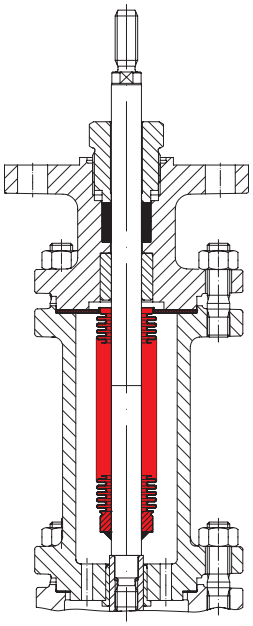

Bellows seal with safety stuffing box

Body design

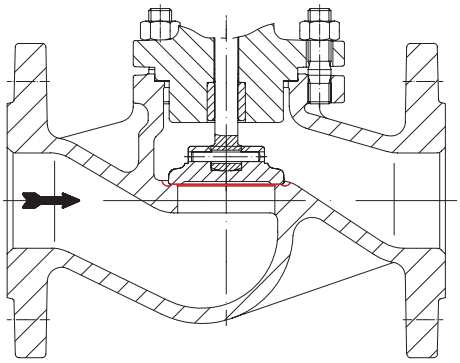

Stainless-steel with machined seat contour

Plug designs

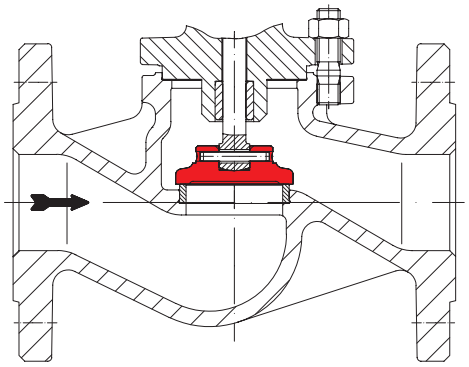

Isolation plug

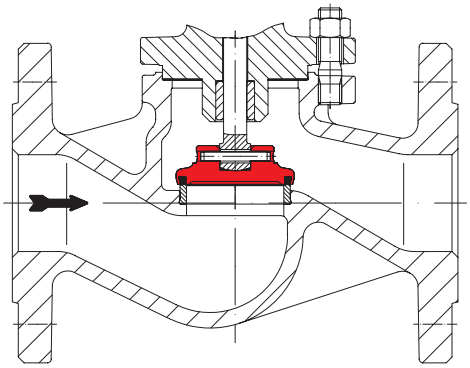

Isolation plug with PTFE soft seat

Technology for the Future.
GERMAN QUALITY VALVES
ARI-Armaturen Albert Richter GmbH & Co. KG, D-33756 Schloß Holte-Stukenbrock,
Tel. +49 52 07 / 994-0, Telefax +49 52 07 / 994-158 or 159 Internet: http://www.ari-armaturen.com E-mail: info.vertrieb@ari-armaturen.com